TM 3-34.56
MCIP 4-11.01

WASTE MANAGEMENT FOR DEPLOYED FORCES

July 2013

DISTRIBUTION RESTRICTION. Approved for public release; distribution is unlimited.

Foreword

This publication has been prepared under our direction for use by our respective commands and other commands as appropriate.

PETER A. DELUCA
Brigadier General, USA
Commandant
U.S. Army Engineer School

RICHARD P. MILLS
Lieutenant General, USMC
Deputy Commandant for
Combat Development and Integration

This publication is available at Army Knowledge Online
(https://armypubs.us.army.mil/doctrine/index.html).
To receive publishing updates, please subscribe at
http://www.apd.army.mil/AdminPubs/new_subscribe.asp,
and the U.S. Marine Corps Web site at <https://www.doctrine.usmc.mil>.

TM 3-34.56
MCIP 4-11.01

Technical Manual
No. 3-34.56

Marine Corps Interim Publication
No. 4-11.01

Headquarters, Department of the Army
Washington, DC

Marine Corps Combat Development Command
Quantico, VA

19 July 2013

Waste Management for Deployed Forces

Contents

Page

PREFACE ..... **v**

PART ONE WASTE MANAGEMENT

Chapter 1 WASTE MANAGEMENT FOR DEPLOYMENT FORCES 1-1
Overview 1-1
Fundamentals 1-6
Roles and Responsibilities 1-9

Chapter 2 WASTE MANAGEMENT INTEGRATION 2-1
Overview 2-1
Planning 2-2
Preparation, Execution, and Assessment 2-10

PART TWO WASTE CATEGORIES

Chapter 3 NONHAZARDOUS SOLID WASTE 3-1
Overview 3-1
Management System 3-1
Management Plan 3-15
Base Camp Transfer and Closure 3-20

Chapter 4 WASTEWATER 4-1
Overview 4-1
Gray Water 4-1
Base Camp Transfer and Closure 4-32

DISTRIBUTION RESTRICTION: Approved for public release; distribution is unlimited.

Chapter 5 HAZARDOUS AND SPECIAL WASTE 5-1
Overview 5-1
HW and Special Waste Management System 5-2
HW and Special Waste Management Plan 5-14
Base Camp Transfer and Closure 5-19
Chapter 6 MEDICAL WASTE 6-1
Overview 6-1
Responsibilities 6-1
Planning Considerations 6-3
Appendix A WASTE STREAMS A-1
Appendix B SAMPLE WASTE MANAGEMENT APPENDIX B-1
Appendix C SPILL PLANNING, RESPONSE, AND REPORTING C-1
Appendix D REACHBACK POINTS OF CONTACT D-1
Appendix E MATERIAL SAFETY DATA SHEETS E-1
Appendix F EMERGING TECHNOLOGIES F-1
GLOSSARY Glossary-1
REFERENCES References-1
INDEX Index-1

Figures

Figure 2-1. Waste management throughout the operations process 2-1
Figure 3-1. Garbage burial pit 3-10
Figure 3-2. Burn barrel 3-13
Figure 3-3. Inclined-plane burner 3-14
Figure 4-1. Purple-pipe recycled water distribution system diagram 4-8
Figure 4-2. Soakage pit 4-10
Figure 4-3. Soakage trench with barrel filter grease trap 4-11
Figure 4-4. Baffle grease trap 4-12
Figure 4-5. Barrel filter grease trap 4-12
Figure 4-6. Evaporation bed 4-13
Figure 4-7. Three-tier evaporation beds 4-14
Figure 4-8. Oil-water separator 4-15
Figure 4-9. Cat hole latrine 4-19
Figure 4-10. Straddle-trench latrine 4-20
Figure 4-11. Deep-pit latrine 4-21
Figure 4-12. Bored hole latrine 4-21
Figure 4-13. Urine soakage pit with pipe urinals 4-22
Figure 4-14. Trough urinal 4-23
Figure 4-15. Urinoil 4-23
Figure 4-16. Burn-out latrine 4-25

Figure 4-17. Enclosed burn-out latrine 4-25
Figure 4-18. Mound latrine 4-26
Figure 4-19. Pail latrine 4-26
Figure 4-20. Septic tank 4-28
Figure 4-21. Soil percolation test 4-30
Figure 4-22. Stages of wastewater treatment 4-31
Figure 4-23. Example of a disc used in fixed film systems 4-32
Figure 5-1. Marking requirements for HW containers 5-8
Figure 6-1. Universal biohazard symbol 6-4
Figure A-1. Sources of waste for unit functions and activities A-2
Figure A-2. Waste classification flowchart A-3
Figure A-3. Wastewater flowchart A-4
Figure B-1. Sample waste management appendix B-2
Figure C-1. Sample spill prevention and response plan C-3
Figure C-2. Sample spill report C-5
Figure E-1. Sample MSDS E-3
Figure F-1. Science Applications International Corporation SW shredder F-1
Figure F-2. Science Applications International Corporation plastics waste processor F-2
Figure F-3. Model 24-30 compactor/baler F-2
Figure F-4. Model BCB2003 beverage can baler F-3
Figure F-5. Model RJ-30 high-density compactor extruder F-3
Figure F-6. American Baler closed-door/nonshear baler F-4
Figure F-7. Air Burners Fire Box F-5
Figure F-8. Air Burners Trench Burner T-300 ..... F-5
Figure F-9. Smartash portable, SW incinerator F-6
Figure F-10. Advanced Combustion Systems PC-400 incinerator F-6
Figure F-11. MediBurn medical-waste incinerator F-7
Figure F-12. PyTEC Pyrolysis waste disposal system F-7
Figure F-13. Clean Burn CB-200-CTB F-8
Figure F-14. Clean Burn CB-2500 ..... F-8
Figure F-15. Clarus Technologies Oil-CAT F-9
Figure F-16. BIODISK Corporation portable wastewater treatment plant F-10
Figure F-17. Orenco AdvanTex Treatment System F-10
Figure F-18. Wastewater treatment package plant F-11
Figure F-19. Seapoint Systems container system C-series F-11

Tables

Table 1-1. Waste management area dimensions 1-5
Table 2-1. Waste management considerations during the MDMP 2-2
Table 2-2. Sample comprehensive preliminary waste requirements work sheet 2-7
Table 3-1. Nonhazardous SW considerations in relation to METT-TC..... 3-16
Table 3-2. Nonhazardous SW generation rates 3-18
Table 3-3. Sample nonhazardous SW requirements work sheet 3-19
Table 4-1. Gray water considerations in relation to METT-TC 4-2
Table 4-2. Sample gray water requirements work sheet 4-4
Table 4-3. Gray water generation rates within base camps 4-5
Table 4-4. Application rate for evaporation beds 4-9
Table 4-5. Application rate for soakage pits and trenches..... 4-9
Table 4-6. Black water considerations in relation to METT-TC 4-16
Table 4-7. Sample black water requirement work sheet..... 4-17
Table 4-8. Relative absorption rates in sewage lagoons 4-27
Table 4-9. Soil absorption rates for lateral lines 4-29
Table 4-10. Pipe sizes..... 4-31
Table 5-1. Stock numbers for specific absorbents..... 5-3
Table 5-2. Stock numbers for specific containers 5-4
Table 5-3. Storage segregation chart 5-6
Table 5-4. PPE..... 5-9
Table 5-5. HW and special waste considerations in relation to METT-TC 5-15
Table 5-6. Sample HW and special waste requirements work sheet 5-16
Table 6-1. Categories of medical waste..... 6-1
Table 6-2. Medical-waste disposal products..... 6-7
Table C-1. Spill response ordering information C-9
Table D-1. Reachback points of contact.....D-1
Table E-1. MSDS guide E-10

Preface

Waste Management for Deployed Forces provides guidance on conducting waste management operations while deployed and focuses on brigade level and below. It provides a better understanding of the waste streams generated during operations and provides guidance on minimizing the harmful effects of waste on human health, the environment, and the mission. It describes the planning necessary to estimate generated waste, based on unit functions and activities and provides guidance on generating and implementing waste management solutions to fulfill immediate and long-term waste requirements. While aimed at engineers, logisticians, transporters, environmental officers, preventive medicine (PVNTMED) personnel, and others who are primarily involved in waste management, it will enlighten commanders and staffs regarding the need to consider the waste generated during each phase of the operation and the importance of incorporating waste management during planning. This manual is a compilation of techniques and procedures found in doctrine, lessons learned, and other reference material; it also serves as a "how to" guide for performing waste management at the tactical level. Because each situation will be uniquely different, based on operational and mission variables, this manual relies on the reader's ability to apply experience, common sense, and good judgment in generating options and implementing solutions that will reduce the harmful effects of waste on human health and the environment to the fullest extent possible. This manual is best used in combination with the subject matter expertise that resides within, or is available through, higher headquarters, supporting units, or reachback. A key reference and keystone document for this manual is *Environmental Considerations*.

A brigade-size unit with a population of 5,000 military and civilian support personnel can generate up to 50 tons of solid waste (SW) per day and 500,000 gallons of wastewater per day if full facilities are available (showers, laundry, latrines, washracks, dining facilities). Water conservation and reuse become significant logistics and environmental issues in almost any environment. Generated waste, if not dealt with properly, can contaminate food and water sources, contribute to the spread of disease, cause varying degrees of harm to the environment, and generate ill feelings with the host nation (HN). Recent experiences in Iraq and Afghanistan have demonstrated some of the consequences when waste generation is not considered early in the planning phase or when it is not responded to effectively. This includes health concerns associated with trash burning and the negative impacts (in terms of time and money) on base camp transfers and closures due to residual environmental impacts. The challenges associated with generated waste will continue to confront U.S. forces in the future. Future operational environments will likely be complex and austere. Local or HN municipal waste disposal or treatment facilities or services may be nonexistent, incapacitated, or beyond reach due to their proximity, security, or political considerations—placing the burden for waste management on the deployed force. Commanders (supported by their staffs) must consider the various operational impacts of waste generation early in the planning phase and throughout each phase of the operation. Sound waste management practices will have positive impacts on the overall mission success of the unit.

Waste management operations involve the reduction, segregation, collection, transportation, processing (treatment), and disposal of waste materials. Waste management is performed to ensure a healthy and sanitary environment, preserve the natural environment, maintain positive relationships with the HN, and sustain mission readiness on many levels. Waste management operations are primarily general engineering tasks aligned with the sustainment warfighting function. Although engineers have staff proponency for waste management operations, they rely on the contributions of many others (such as environmental officers, transporters, logisticians, and PVNTMED personnel) who serve as part of the waste management planning group. Commanders (supported by their staff) are responsible for addressing the implications of generated waste early in the planning phase and for ensuring that the unit effectively performs waste management throughout the operation.

This manual is organized as follows:

- Chapter 1, Waste Management for Deployed Forces.
- Chapter 2, Integrating Waste Management.
- Chapter 3, Nonhazardous Solid Waste.
- Chapter 4, Wastewater.

- Chapter 5, Hazardous and Special Waste.
- Chapter 6, Medical Waste.
- Appendix A, Waste Streams.
- Appendix B, Example Waste Management Appendix.
- Appendix C, Spill Planning, Response, and Reporting.
- Appendix D, Reachback Points of Contact.
- Appendix E, Material Safety Data Sheets.
- Appendix F, Emerging Technologies.

Definitions for which this publication is the proponent publication (the authority) are in boldfaced text and have an asterisk in the glossary. These terms and their definitions will be incorporated into the next revision of *Operational Terms and Graphics*. For other definitions in the text, the term is italicized and the number of the proponent publication follows the definition.

This publication applies to the Active Army, the Army National Guard/the Army National Guard of the United States, the U.S. Army Reserve, and the U.S. Marine Corps unless otherwise stated. This manual is a dual-service publication. Any reference to the term *Soldier* throughout this document is inclusive of Soldier, Marine, Corpsman, and Seabee. For the purposes of relative combat power comparison, any reference to the Army term *brigade combat team (BCT)* shall be deemed equivalent to a regimental combat team-based Marine air-ground task force (MAGTF). Any reference to the Army term *military decisionmaking process (MDMP)* is inclusive of the Marine Corps planning process as they are comparable, deliberate decisionmaking methodologies that have similar visibility and connotation within each Service. Any reference to the Army term *mission, enemy, terrain and weather, troops and support available, time available, and civil considerations (METT-TC)* is equitable to the Marine Corps mission, enemy, terrain, troops, and time available (METT-T).

The proponent for this publication is the U.S. Army Training and Doctrine Command. Send comments and recommendations on DA Form 2028 *(Recommended Changes to Publications and Blank Forms)* directly to Commanding General, U.S. Army Maneuver Support Center, ATTN: ATZT-TDD, 320 MANSCEN Loop, Suite 270, Fort Leonard Wood, Missouri 64573-8929. Submit an electronic DA Form 2028 or comments and recommendations in the DA Form 2028 format by e-mail to <leon.mdottdddoc@conus.army.mil>.

Unless this publication states otherwise, masculine nouns and pronouns do not refer exclusively to men.

A listing of preferred metric units for general use is contained in Federal Standard 376B <http://www.usaid .gov/policy/ads/300/fstd376b.pdf>.

PART ONE

Waste Management

Part one of this manual is focused on defining waste management and describing how it is incorporated into mission planning using a 6-step process. Waste management operations are conducted to minimize the harmful effects of waste on human health, the environment, and the mission and to identify resources that can be reused or recycled for the benefit of our forces and the HN. Effective waste management begins early in the planning phase by estimating the amount of waste that is likely to be generated by the force and determining the best possible means for dealing with it, based on an assessment of the mission variables. Waste that is improperly managed presents unecessary risks to Soldiers' health, detracts from the mission, and hinders base camp transfers and closures.

Chapter 1

Waste Management for Deployment Forces

Meeting America's strategic objectives hinges on the Army's ability to promptly deploy forces at any time, in any environment, and against any adversary. Exploiting this expeditionary capability will often place units in an austere operational environment that lacks the necessary infrastructure to accommodate its generated waste. Haphazardly stockpiling or disposing of waste can spread disease and threaten human health, contaminate food and water sources, harm the environment, misuse resources (time, money, and personnel), and negatively impact mission readiness. In support of the Army's commitment to environmental stewardship and to minimize the harmful impacts of waste on Soldier health, the environment, and the mission, commanders at each echelon must ensure that waste management is incorporated throughout the operations process. This chapter describes waste management, its importance in sustaining Army operations, and some of the challenges that will inhibit the ability to perform effective waste management operations. It also describes key roles and responsibilities that are essential for effectively performing waste management operations. Waste management operations will be conducted in compliance with Status of Forces Agreements, HN laws and environmental policies, theater standing operating procedures (SOPs), and with the concurrence of local population leaders. Operations should be conducted in a manner that supports a sustainable force, protects Soldiers, reduces overall costs, and limits U.S. liability.

OVERVIEW

1-1. Any discarded material is considered waste, but it may not be without value or possible use. Waste is generally categorized as nonhazardous SW, wastewater (gray or black water), hazardous waste (HW), special waste, or medical waste. Waste has immediate and long-term negative effects if not managed properly. The immediate effects may seem quite inconsequential at the time, perhaps only an eyesore or the source of objectionable odors. However, the more significant effects that can threaten human health and the environment often go unnoticed. When mismanaged, waste becomes more harmful with time, thus generating long-term conditions that become more difficult and costly to rectify.

1-2. It is necessary to approach waste management as a system of systems. Base camp planning must be a deliberate process that will require an innovative application of scientific principles to provide better waste management practices while striving to reach self-sustainability processes. Each waste component is not dealt with independently, but rather as an integrated and innovative process. This approach has been shown to provide significant cost savings. For example, human waste is not dumped off site, but used as a component in energy production or treated on-site to reuse the water for other purposes. This reduces the amount of energy and water transported into a base. Dining facility waste is used as a component in energy production or composted, both very useful processes. Compost and sludge are used as micronutrients to bioremediate or land-farm petroleum-contaminated soils, saving millions of dollars by not shipping the soil out of the country. The sludge from waste treatment processes is composted and used as a micronutrient source in the land farming of petroleum-contaminated soils. These are only a few of the practices that may help reach the goal of a self-sufficient base camp.

DEFINITIONS

1-3. ***Waste management*** **is the collection, transport, treatment, or disposal of waste materials in an effort to ensure a healthy and sanitary environment.** ***Integrated waste management*** **is the management of the entire waste process, including generation, storage, collection, transportation, resource recovery, treatment, and disposal. It employs several waste control methods based on the waste hierarchy (avoidance, reduction, recycling, reuse, recovery, treatment, and disposal) and is aimed at minimizing the environmental impact of waste.** It also includes the measures and activities necessary for minimizing waste generation. Waste management operations are primarily general engineering tasks; part of the sustainment warfighting function (see Field Manual [FM] 7-15); and include the construction, operation, and maintenance of new (and the upgrade of existing) utilities for the purpose of waste management. Waste management operations are conducted to minimize operational, health, and environmental impacts of waste. Although engineers have staff proponency for waste management operations, it is very much a team effort that depends on the contributions of transporters, logisticians, PVNTMED personnel, and other specialists within the staff. The roles and responsibilities for waste management operations are discussed later in this chapter.

1-4. The overall objective of waste management is to minimize the potential harm and cost that waste can cause by—

- Planning in detail and making the best decisions possible, with the best information available.
- Predicting short- and long-term hazards (risks) and implementing actions to mitigate the effects.
- Leveraging available resources.
- Developing options that are feasible, suitable, and sustainable (see chapter 2).

1-5. Waste management operations consist of four major activities that may be performed sequentially or simultaneously and recur as necessary, based on the situation. These major activities are—

- **Collect.** Collect waste from the point or source of generation. Source segregation is absolutely key for any SW management solution. Waste management operations work most effectively if the waste is segregated at the point of generation.
- **Transport.** Transport waste from collection points to storage, treatment, disposal, or recycling facilities.
- **Recover.** Recover material from the waste stream that results in a product with a potential for economic or ecological benefit, while reducing the amount of waste that requires disposal. Recovery operations can include material recovery (such as recycling), energy recovery (such as reusing a fuel or creating a fuel from waste), biological recovery (such as composting), and reuse.
- **Dispose.** Waste disposal is the final disposition of a discarded or discharged material. This includes general refuse that is destined for a landfill or incinerator, residual waste from reuse and recovery operations (which is not otherwise reused or recovered), and other activities required for specific waste categories. Treatment may be performed in conjunction with disposal or as a means of disposal in itself. Treatment is the use of biological, chemical, or mechanical methods to change the character or composition of waste, and reduce or eliminate its potential as a hazard to human health or the environment.

1-6. As with other military functions, waste management is both an art and a science:

- The science is using algorithms and planning factors to anticipate waste requirements and implementing proven solutions that are based on established procedures and methodologies to meet those requirements—while leveraging technology to improve efficiencies.
- The art is being able to visualize complex situations and understand what is possible when operating under less-than-ideal conditions with limited resources, and while continuously balancing mission requirements with environmental stewardship. The art is in understanding when it may be necessary to sacrifice efficiency for effectiveness, to create solutions that are practical, convenient, and easy to follow when Soldiers and other personnel are tired, unaware of the process, or pressed for time. It is accepting that more preferred options may have to be deferred, but not abandoned, until the necessary conditions have been set to implement better solutions.

CHALLENGES

1-7. Performing waste management in support of deployed forces will be a challenge. Units must be prepared to bear the entire burden for waste disposal, especially during the initial phases of an operation when the theater is immature. Operational requirements may require forces to be positioned beyond the reach of existing or functional waste management facilities. When facilities are within reach, they may lack the capacity to handle the additional load or are inaccessible due to the security or political situation.

1-8. Even though U.S. regulatory guidance does not typically apply to contingency operations, increases in the appreciation of full life cycle costs, environmental awareness, and sensitivities have resulted in more command emphasis on environmental considerations and on properly managing waste abroad. Essentially, the same environmental considerations that apply in the United States and on U.S. bases overseas are expected to be applied in the operational area to the fullest extent possible without impacting the mission. A commander's guidance will be highlighted in appropriate annexes and appendixes of higher command plans.

1-9. It is important for leaders to reinforce with their Soldiers and the civilian population on the base that they are setting the example for environmental stewardship within the HN. Establishing the proper environmental mind-set within all personnel on the base can be a challenge as they may perceive a total disregard for the environment, based on local population common practices. Leaders must also enforce established environmental standards with local and nonlocal laborers working under U.S. contracts. Scopes of work and performance work statements must include the necessary guidelines that meet U.S. expectations for environmental protection, and inspections must be conducted to ensure compliance.

1-10. Leaders will be challenged in implementing suitable waste management plans with limited resources and capabilities needed for performing waste management. Specialized engineer units (such as facility engineer detachments and forward engineer support teams) may be available at the tactical level as part of specific augmentation, but they are normally employed at the operational and strategic levels where they are typically in high demand, especially during the initial phases of an operation. Waste management planners at BCT level and below may have to rely solely on reachback to access the technical expertise needed during the initial phases of an operation.

1-11. Given the unpredictable and fluid nature of contingency operations, waste management planners will be challenged in determining how best to employ waste management systems. Waste management planners attempt to create waste management plans that will fulfill the current needs, while concurrently setting the conditions for enduring capabilities that will meet anticipated needs in the future. Choosing the right location for enduring waste management systems from the start avoids the need for additional land (real estate) acquisitions and environmental assessments, while minimizing the total number of areas that will likely require remediation or rectification as part of base camp transfer and closure. If possible, waste management areas should be collocated. This maximizes available real estate and resources, especially manpower to operate the site. It also reduces the scope of engineer effort required to construct and operate the SW site (such as perimeter fencing or berms, signage, gates, interior road network, and office areas), simplifies environmental recordkeeping for the types and quantity of material disposed, and eases the burden on the base fire protection service. Base camp SOPs should be published before waste management operations begin.

1-12. Recycling and reuse programs should be initiated for plastics, cardboard, paper, batteries, tires, wood, and aluminum cans and other metals (ferrous and nonferrous). This will require source segregation, sorting facilities, compactors (sized for the base), and enough recyclables to make it effective. Composting for food waste and land farming for petroleum contaminated soils will need consideration, based on the size of the base.

1-13. For bases with 4,000 personnel or more, the initial minimum planning factor that should be used for the development of the SW management facility is 12 acres. For a brigade-, battalion-, or company-size base, the planning factor will be reduced based on the mission, the number of personnel, and the needs of the base. The breakdown of space requirements for large base camps, brigade- or battalion-size elements, and company-size elements are shown in table 1-1, page 1-5. Planning should always take into consideration surges in personnel and intended growth of the base. Waste management planners should plan for the optimum, including—

- The hazmat area, or hazardous waste accumulation points (HWAPs), should be 60,000 square feet with pole barn covered storage for as much of the area possible (10 to 16 feet wide and as long as needed on both sides of the yard is suggested). Include three to five 8 by 20 feet containers for storage. Ensure hazmat storage is contained in over pack materials (for example, secondary containment). For a brigade- or battalion-size base, this area should be 22,500 square feet with three or four storage containers. For a company-size base, this area should be 2,500 square feet with an appropriate number of storage containers to meet the needs of the base.
- The incineration or burn pit area should be 90,000 square feet with an additional 90,000 square feet for the ash pit. For a brigade-, battalion-, and company-size base, this area should be 40,000 square feet for the incineration area and ash pit. Based on the needs of the mission and the base, a SW incinerator, hazardous waste incinerator, and regulated medical waste incinerator should be considered.
- The SW sorting area should be 22,500 square feet with a pole barn to cover a significant part of the area. Wood or metal siding should be used so that the siding may be removable in warm areas. A concrete floor with gravel around it is required. The size of the sorting area should be the same regardless of the size of the base.
- The administration and scales areas should be 4,900 square feet. The administration building should be 20 by 32 feet (20 by 24 feet for a brigade- or battalion-size base) at a minimum. The area size will remain the same for a brigade- or battalion-size base. For a company-size base, the area should be 2,500 square feet.
- The compacting area should be 90,000 square feet. For a brigade- or battalion-size base, this area should be 10,000 square feet at least. A compacting area is not expected for a company-size base.
- The customer drop off area should be 20,000 square feet. This will provide space for six storage bins (approximately 30 by 60 feet) for metals, plastics, wood, and so forth. This size will remain consistent regardless of the base size, to accommodate the typical vehicles that drive into the area. The number of bins may change, based on the needs of the base and the number of personnel.
- The composting area should be 90,000 square feet. A composting area may not be feasible for a brigade-, battalion-, or company-size base, but it should be considered when possible.

- The land farming area should be 45,000 square feet. Land farming is the bioremediation of petroleum contaminated soils. This capacity must be available in theater or at least regionally to remove the cost of shipping soil out of the area of operations. Land farming may not be feasible at every base, but it should be considered where possible because the materials required and time to conduct this operation is readily available within Logistics Civil Augmentation Program (LOGCAP) facilitated base operations.
- The power generation area should be 10,000 square feet. A power generation area in the SW management facility is optional, based on the design of the power grid for the base. Power lines may be run from a centrally located base power center.

Table 1-1. Waste management area dimensions

Identified Waste Area	*Base Camps of 4,000 or More Personnel*	*Brigade- or Battalion-Size Element*	*Company-Size Element*
Hazmat	60,000	22,500	2,500
Incineration area/burn pit	90,000	40,000	40,000
Ash pit	90,000	40,000	40,000
Sorting area	22,500	22,500	22,500
Administration/scales	4,900	4,900	2,500
Compacting area	90,000	10,000	Not expected
Customer drop-off area	20,000	20,000	20,000
Composting area	90,000	Should be considered	Should be considered
Land farming area	45,000	Should be considered	Should be considered
Power generation area (optional)	10,000	10,000	10,000

Notes.
1. All numbers are in square feet unless otherwise stated.
2. Each area in this table may require additional materials or resources to make them functional. Review paragraph 1-13 for more information.

1-14. The waste management facility must have engineered drainage and gravel in areas of high traffic. Allow enough space for equipment and vehicle movement. The facility must not be placed in an area that will flood or become waterlogged. The prevailing wind direction must be known so that placement will not affect troop work and sleeping areas. Locate the burn pit as far away as possible from living and sleeping areas, the flight line, hazmat area, and fuel storage areas. The prevailing wind must push the smoke away from these areas and the rest of the waste management facility. Using enclosed combustion chamber devices, referred to as incinerators, is less hazardous in regards to air pollution, but they will not immediately be available. Once available, position it on a concrete pad that is at least six inches thick and constructed to withstand the weight of the incinerator and the vehicles typically used. The ash pit needs to be adjacent to the incineration area. Locate the hazmat area away from living and sleeping areas, the flight line, fuel storage areas, and water sources. Locate the sorting area near the compacting facility and incineration area with ample allowance for traffic flow. Consider a belt picking system for large bases. Locate the compacting area near the sorting area and customer drop off area. Plan for a metal building sized to accommodate the number of balers and compactors that will be used. Plan for as much pole barn covered storage as possible for baled or loose product. The collected materials from the sorting area can be moved in boxes, by conveyor belt, or by hand to the compacting area. Locate the customer drop off bins in an open circulation area with space for large trucks to drop off and pick up material. Locate the power generation area near the areas with the most power usage, such as compacting and sorting areas. The administration building and the maintenance facility will use less energy. Use concrete pads under generators. If a fuel pod is to be placed, it is best to put it in a concrete containment area that will hold 115 percent of the container volume. Locate it away from flame and heavy traffic. The use of buried power lines, if planned for in advance, is better than using overhead lines. Locate the administration building where supervisors can see ongoing operations in the various waste management areas, where customers can easily find it, and out of the main traffic flow. Ensure ample parking space is available. Place supervisor offices—with wrap around

windows—on the second story, which will allow them to oversee operations. Outside stairs are essential. Scales should be located near the administration building. Centrally locate the maintenance facility. Locate the composting area with easy access to and minimal distance from the sorting area and the ash pit. Nonhazardous ash may be composted. Provide access for large trucks to pick up product, away from the main traffic flow if possible. Plan for a pole barn or metal building for heavy equipment storage. Required equipment includes a grinder, a screen, a skid loader, and Allu-scoop (a scoop with three rolls on the bottom that is fixed onto a loading crane). Space will be needed for composting piles and for stockpiling raw materials, such as pallets or wood chips. The land farming area should have an impermeable surface to place contaminated soil that prevents leachate from getting into the ground and contaminating the ground water. This impermeable surface can be a concrete pad with a lip to prevent run off or a liner placed under the ground surface. The same equipment that is used for composting may be used for land farming.

1-15. Engineering storage buildings (pole barns) should be set on a 1 meter high wainscot concrete wall. This will reduce damage to light weight wall panels and prevent wall panel deterioration due to rust or acidic or caustic substances. Sliding doors are recommended on certain buildings to allow air flow during warm weather. Open-walled canopies are practical, especially in built-up areas (less uplift design required). Provide a large concrete pad as a loading/offloading area to prevent rutting of the yard surface. When possible, colocate compatible functions under one roof (like the sorting area that doesn't contain food waste and compacting operations or administrative functions). Add a perimeter fence that will catch blowing debris and control access to the yard. Include an on-site retention pond to reduce downstream flooding and contamination.

1-16. Waste management planners should plan for the development of sewage lagoons first and wastewater treatment package plants (sized for 10 percent over the capacity of the planned base) second. Sewage lagoons for a base of less than 1,000 personnel should be 2 acres, 3 acres for 2,000 personnel, and an additional 3 acres for every 2,000 personnel increase. Dishwashers should be incorporated into dining facility construction. Wastewater conservation standards will need to be set and enforced, such as 4 minute showers and repair of identified leaks immediately. In addition to the planning for sewage lagoons, planning for a brine lagoon will also need to be incorporated if a reverse osmosis water purification unit (ROWPU) will be used to produce potable water for the base camp.

FUNDAMENTALS

1-17. Fundamentals provide a foundation to guide actions in any situation. They provide a basis for incorporating new ideas and technologies, while fostering the initiative needed for leaders to be adaptive, creative problem solvers. The fundamentals described here do not serve as a checklist, and their degree of application varies within each situation.

IMPROVISE

1-18. Waste management planners and executors must be able to improvise and adapt to unexpected situations or circumstances. They must be able to create, invent, arrange, or fabricate whatever is needed from whatever is available. They modify established techniques and procedures and local practices to fit the current situation.

REMOVE, REDUCE, REUSE, AND RECYCLE

1-19. Since all methods of waste disposal will impact the environment to some degree, waste minimization should be of primary importance within every operation. Units should minimize the use of disposable products as much as possible (such as removing products in glass containers from the supply system; reducing reliance on disposable plastic containers and paper products; and using bulk water containers instead of individually packaged, plastic water bottles) and focus on source reduction through preengineered materials and supplies that will reduce the amount of generated waste. Efforts should be made to reuse materials (such as construction materials, wood pallets, and packaging material) whenever possible. Units should establish consolidated storage yards or areas for construction materials and other common-use items so that they can be conveniently accessed and reused by multiple users. Maintenance facilities must change operations to maximize the reuse of petroleum products, fuels, and other fluids used

in vehicles. Commanders and leaders at all levels must be aware of these issues and work with LOGCAP and other agencies to improve waste management practices.

1-20. Units should establish and implement a recycling program whenever possible, even though there will be challenges. Functional local recycling centers in the operational area may be unavailable, and shipping recyclable materials to larger base camps, adjacent countries, or back to the continental United States (CONUS) may not be economically viable or practical. However, establishing or reconstructing local recycling facilities as part of capacity building efforts may offer long-term solutions, while bolstering the local economic situation. The cost of shipping some wastes out of country will be reduced or eliminated by establishing effective waste management programs, such as bioremediation of petroleum contaminated soils on-site (compared to shipping it out of country as hazmat) and recycling crank case oil back into the fuel tank.

1-21. Units should increase the purchase of "green products" (for example, paper cups instead of foam cups). Green products contain recycled material, are biobased, or are energy efficient. They are environmentally preferable items and meet the requirements of the Department of Defense (DOD) Green Procurement Program. These items can be procured through such places as the General Services Administration and Defense Logistics Agency (DLA). Green products conserve resources, save energy, save landfill space, and reduce pollution. Include green products in contract specifications, and/or remove restrictions to purchasing green products in contract specifications and purchase requests.

MAINTAIN VISIBILITY

1-22. Waste disposal is typically "behind the scenes" and often taken for granted. It is important to maintain visibility and command emphasis on the waste situation, which can be achieved through the following tasks:

- Highlight pertinent waste management considerations during mission analysis, course-of-action (COA) analysis, and decision briefs as part of the MDMP.
- Inject relevant and realistic waste-related scenarios (such as responding to a significant hazmat spill near an area of cultural or historical significance) into wargaming and rehearsals.
- Establish roles and assign responsibilities in orders, plans, and SOPs clearly. Establish ownership for collection sites, and assign individual responsibilities for specific areas or portions of the waste management system.
- Provide updates or spotlight briefs to the commander and staff on waste management standards, compliance, and waste-related topics of interest on a regular or recurring basis (for example, during shift change briefs and working group meetings as part of unit battle rhythm).
- Include waste management instructions in attachments to operation plans/orders, when appropriate, instead of publishing separately.
- Ask subordinate units about their plans for waste disposal during mission briefs or rehearsals, as appropriate.
- Bring in subject matter experts to augment the planning, wargaming, and execution of waste management programs.

FOCUS AT THE POINT OF GENERATION

1-23. Waste should be segregated as near as possible to the point of generation. Not only does this help raise awareness of its existence and establish ownership, but it also minimizes handling and transportation requirements that will—

- Conserve resources (such as time, manpower, equipment, and cost).
- Reduce the chance of mishaps (such as spills and littering).
- Minimize personnel exposure to potentially harmful materials.

ANTICIPATE

1-24. Waste management planners must anticipate challenges and opportunities. Challenges may arise in terms of additional waste requirements resulting from task organization changes, unit strength surges (such

as during the transfer of authority and right-seat rides when base camp populations are essentially doubled), and base camp realignment which prompts expansion and closure. The status of current waste management systems must be monitored to anticipate when initial design capacities will be exceeded. The equipment, funding, and space requirements for effective waste management programs must be planned and included in the contracting services and construction timelines to ensure that they are in place from base camp inception.

1-25. Waste management planners must look for and seize opportunities to reduce hazards (risks) by leveraging available capabilities and resources in a proactive manner and minimize the current and future impacts of waste. They look for opportunities to incorporate existing and emerging technologies (such as compactors, shredders, and fuel blenders) and ways to reduce, reuse, and recycle to minimize the overall volume of generated waste and improve the overall efficiency and effectiveness of waste management efforts. See appendix F for additional information on emerging technologies.

SIMPLICITY

1-26. Waste management policies and procedures should be simple to understand, easy to follow, and as user-friendly as possible. For example, place trash receptacles and recycle bins together in a convenient location, and post signs that clearly explain what is expected. The use of barriers (such as the size and shape of openings to containers and bins) is also a simple way to prevent the inadvertent mixing of waste types. It is beneficial if waste containers and recycling containers are not the same color. Associating a color with the material to be placed in a container can help improve the separation of trash from recyclables.

ARCHIVING AND DATA MANAGEMENT

1-27. The Defense Occupational and Environmental Health Readiness System (DOEHRS) is a network Internet protocol router, password-protected system that contains waste management surveys and occupational and environmental health site assessments. This system is controlled and operated by the Army. Other military Services are able to use this system after creating a password-protected account and can submit their occupational and environmental health site assessments electronically into the data portal. Marine Corps units should ensure that the proper channels of communication are verified so that appropriate visibility is maintained for information submitted to the data portal. This system may also be used to manage waste management data. All waste management documentation should be submitted to the Occupational and Environmental Health System (OEHS) data portal for archival. The data portal also contains historical OEHS data related to U.S. military deployments. Unclassified documents should be sent to the network Internet protocol router data portal by one of the following means:

- Web site: <https://doehrs-ih.csd.disa.mil/Doehrs/>.
- Data portal address: <https://doehsportal.apgea.army.mil/doehrs-oehs>.
- E-mail: <oehs.data@us.army.mil>. (Please do not sign or encrypt e-mails.)
- Fax: Defense Switched Network (DSN): (312) 584-2407 or Commercial (410) 436-2407
- Mail: USAPHC-ESIP, ATTN: MCHB-TS-RDD, 5158 Blackhawk Road (Building E-1675), Aberdeen Proving Ground, MD 21010-5403.

ACCOUNTABILITY

1-28. *Accountability* is the obligation of an individual, unit, or organization to accept responsibility for their activities and disclose the results in a transparent manner. Accountability within waste management is achieved by—

- Documenting the dates when field latrines or waste burial sites are opened and closed.
- Documenting preexisting and current conditions by using digital photographs and videos to counter liability claims and enable remediation and rectification efforts.
- Including waste management within the command inspection program.
- Ensuring that contracts make the contractor liable for environmental impacts.

- Establishing means (such as contracting officer's representatives [CORs] and contractor escorts) for ensuring contractor compliance.

ROLES AND RESPONSIBILITIES

1-29. It is the commanders and leaders responsibility at each echelon to ensure that waste management is incorporated throughout all operations in support of the Army's commitment to environmental stewardship. Waste management minimizes the harmful impacts of waste on the health of all personnel, the environment, and the mission.

1-30. The key roles and responsibilities for performing waste management described below are aligned with the staff positions usually existing in most brigades and battalions. The commander will organize elements of the staff sections within command posts by warfighting function or planning horizon in a way best facilitating command and control. The organization of command posts and the assignment of waste management responsibilities within cells and staff sections will vary based on the echelon, type of unit, and the commander's immediate mission or needs. In some cases, the commander may decide to assign certain waste management responsibilities to specific individuals, regardless of their branch or functional area, based on unique skills that they may possess as a result of military or civilian experiences and education.

1-31. The responsibilities for waste management at the company level are similar to those at the brigade and battalion level. Company commanders will arrange the waste management responsibilities outlined below to best suit their organizational structure, matching talent to tasks. Most of the duties and responsibilities for waste management will be assigned to individuals within the company headquarters as an additional duty. Each Army unit commander will appoint an environmental officer as an additional duty and ensure that they are properly trained as required by Army Regulation (AR) 200-1. In the Marine Corps, the environmental officer is referred to as the environmental compliance coordinator and is required to be appointed by Marine Corps Order (MCO) P5090.2A. The environmental officer can be a commissioned or noncommissioned officer. The environmental officer will play an important role in effectively performing waste management at the company level.

1-32. Procedures for conducting waste management should be standardized and captured within unit SOPs when possible. SOPs provide units with standardized procedures for the execution of routine actions, save time in producing operation orders, and facilitate the training of new personnel on requirements and proper procedures.

BRIGADE, BATTALION, AND SQUADRON COMMANDERS

1-33. The commander ensures that the unit's generated waste and its impacts are considered early in the planning phase and that waste management is integrated throughout the operations process. Army commanders must be aware of the requirements in AR 200-1 to appoint and train an environmental officer. The environmental officer will generally be called upon to assist the engineer staff officer with the environmental mission or to undertake the program if there is not an engineer staff officer within the headquarters. The commander may establish a waste management working group within the command post that focuses on solving waste-related problems. Within the Marine Corps, technical specialists are specifically trained for a purpose and retained at the MAGTF command element level. Therefore, the activities of the environmental compliance coordinator and waste management planning will primarily be focused at the BCT level or above. The waste management working group may consist of engineers; logisticians; PVNTMED; chemical, biological, radiological, and nuclear (CBRN) personnel; the environmental officer; CORs; and other members of the staff. To facilitate effective waste management, the commander does the following:

- Allocates resources (manpower, equipment, and material) to enable the effective performance of waste management operations throughout the command.
- Provides command emphasis on the importance of waste management and maintains visibility on the effectiveness of waste management operations.
- Provides guidance on the prioritization of waste streams to facilitate the timely development of waste management solutions. (See appendix A for additional information.)

- Ensures that the unit operates in a way that minimizes the effects of waste on human health and the environment.
- Ensures that subordinate units comply with established policies and procedures that govern waste management operations, to include those of the base camps on which they are tenants.
- Appoints a waste management working group facilitator if a working group is established.
- Ensures that personnel involved with handling waste receive the necessary training.

SENIOR ENGINEER STAFF OFFICER

1-34. For the Army, the senior engineer staff officer is the primary staff integrator for the environmental program, which includes waste management. If the commander establishes a waste management working group, the engineer staff officer may be appointed as the group's facilitator (see paragraph 1-43). The engineer staff officer is responsible for the following tasks:

- Identifying and coordinating waste requirements throughout the operations process.
- Addressing waste management considerations within the MDMP.
- Implement senior headquarters SOPs or standards for environmental programs, to include standards of design, construction, waste management systems, and the use of the USACE, LOGCAP, or other groups to manage these overall programs. The engineer staff will create the SOPs or guidance if not available.
- Maintaining waste-related information within the running estimate and providing updates to the commander and staff to enable situational understanding and facilitate decisionmaking.
- Participating in the waste management working group, if established, and serving as the group's facilitator if appointed by the commander (see paragraph 1-43 for more details).
- Recommending priorities for waste management to facilitate the allocation of resources.
- Identifying ways to improve efficiency and effectiveness in managing the unit's waste, based on assessments.
- Monitoring the acquisition and distribution of waste management materials and equipment.
- Participating in project approval and environmental boards and meetings as required.
- Providing scopes of work or performance work statements within contracts as required, to include specifications for waste minimization and green procurement.

For the MC, there may not be an engineer staff officer assigned at the BCT level, logistics (S4/G4) has the responsibility for waste management.

ENVIRONMENTAL OFFICER/ENVIRONMENTAL COMPLIANCE COORDINATOR

1-35. Environmental officers must be designated in writing by the commander; receive appropriate environmental officer training; and be familiar with AR 200-1, *Environmental Considerations*, and this manual. Environmental officers must be empowered by the commander to run the unit environmental program. The environmental officer manages environmental issues, ensures environmental compliance within the unit, keeps environmental records, and incorporates environmental considerations into unit planning and operations, including composite risk management assessments. (See *Environmental Considerations* for more information on the roles and responsibilities of the environmental officer.) For the Army at the BCT level, the environmental officer may conduct the environmental mission instead of, or in addition to, the engineer staff officer. The environmental officer becomes part of, and/or may facilitate, the waste management working group to ensure that all aspects of the unit waste management plan are in compliance with established environmental policies and procedures by performing the following tasks:

- Working together with waste management planners at all levels of command to ensure that environmental considerations are included within waste management planning.
- Working together with the waste management working group to ensure that unit waste management operations are in compliance with environmental policies and procedures established for the operational area. At the BCT level, the environmental officer will coordinate environmental issues with senior headquarters and may be required to develop more area of operations specific waste characterizations and a waste-handling SOP.

- Including waste management systems within environmental inspections.
- Identifying ways to improve efficiency and effectiveness in managing the unit's waste, based on assessments.
- Ensuring that adequate personal protective equipment (PPE), spill response supplies, material for establishing HWAPs, and waste packaging and marking supplies are on hand.
- Reviewing contracts for environmental compliance and ensure that specifications for waste minimization and green procurement are included as appropriate.

The Marine Corps environmental compliance coordinator, at BCT level and above, will be a technical specialist trained to manage the environmental mission for the expeditionary force as part of a special task force that will go where it is needed and will be coordinated at the MAGTF command element level.

LOGISTICS STAFF OFFICER

1-36. The logistics staff officer (S-4) is the staff integrator for sustainment operations and the staff point of contact for unit movements and deployments. The S-4 provides staff oversight in the areas of supply, maintenance, transportation, and field services and works together with the engineer staff officer (or the environmental officer) and other staff members in performing waste management. Within the Marine Corps, logistics (S-4/G-4) holds the primary responsibility for waste management. The S-4 is specifically responsible for the following tasks:

- Procuring special handling materials, tools, and equipment needed to perform waste management tasks.
- Reducing the unit's inventory of hazmat, based on the responsiveness of the supply system without risking mission readiness, and using alternative materials that are nonhazardous or less HW and/or hazmat that can be recycled.
- Ensuring that warehousing and storage facilities comply with waste management policies and procedures.
- Using supply trucks to back-haul waste during resupply operations.
- Working with waste management planners to identify and characterize waste requirements during planning.
- Integrating waste management tasks within sustainment plans and operations.
- Coordinating waste management tasks (staff actions) through sustainment channels with higher, adjacent, and subordinate units.
- Developing waste-related information during the sustainment preparation of the OE.
- Coordinating special transportation and shipping requirements for hazmat, HW, and special waste as required.
- Identifying and coordinating sustainment requirements in support of waste management operations throughout the operations process.
- Developing policies and procedures for the safe and effective transport of waste throughout the operational area if similar guidance does not exist, to include the retrograde movement of HW and special waste and recoverable items back to CONUS as required in coordination with DLA or a similar agency.
- Identifying materials that are recoverable through the supply system and providing policies and procedures for their effective and efficient recovery.
- Identifying materials and equipment that require demilitarization and providing the necessary instructions to ensure that they are properly handled.
- Coordinating with other waste management planners to develop recommended priorities for waste management and facilitate the allocation of resources.
- Participating in the waste management working group and serving as the group's facilitator (see paragraph 1-43) if appointed by the commander.
- Identifying ways to improve efficiency and effectiveness in managing the unit's waste, based on assessments.
- Monitoring the acquisition and distribution of waste management materials and equipment.

- Integrating waste management considerations within all acquisition programs.
- Reviewing and revising military specifications and standards to eliminate and/or reduce the use of hazardous substances and toxic chemicals, when appropriate.
- Implementing the necessary provisions within contracts to ensure that government-owned, contractor-operated facilities meet and remain compliant with environmental legal mandates and protect the Army from liability and/or incurred fines due to contractor operations.
- Maintaining waste-related information within the logistics running estimate and updating the commander and staff to enable situational understanding and facilitate decisionmaking.
- Coordinating with the radiation safety officer, radiation protection officer, radiation protection assistants, and CBRN personnel in all matters pertaining to radioactive material equipment.

OPERATIONS STAFF OFFICER

1-37. The operations staff officer is the coordinating staff officer for all matters concerning unit tactical operations. The operations staff officer, together with the engineer staff officer and the S-4, integrate and synchronize waste management tasks within operations. With regards to waste management, the operations staff officer is specifically responsible for the following tasks:

- Integrating waste management considerations throughout the operations process.
- Synchronizing specified and implied waste management tasks within the concept of operations to achieve the commander's intent.
- Reviewing the appropriateness of waste management tasks included in plans and orders that are issued to subordinate units.

SURGEON

1-38. The command surgeon (for all command levels down to the maneuver battalion) is a medical officer who is the special staff officer responsible for advising the commander on the Army Health System mission and the health of the command. In support of waste management, the surgeon is responsible for the following tasks:

- Working with the unit's organic or augmenting PVNTMED personnel, the environmental officer, and the engineer staff officer to ensure that medical and other types of waste are appropriately dealt with to mitigate the risks to human health and the environment.
- Providing policy on the human health aspects of waste management operations.
- Implementing headquarters policies or, if required, establishing policies and procedures for the management of medical waste.
- Monitoring the medical logistics needed for managing medical waste.
- Planning and implementing force health protection operations to counter health threats associated with exposure to waste or waste by-products.
- Implementing policies and procedures for medical waste management in plans, orders, attachments, and directives.
- Identifying health threats associated with waste generation and recommending techniques and procedures to mitigate the effects.
- Ensuring that health considerations are included in waste management planning.
- Monitoring occupational health surveillance in coordination with PVNTMED personnel.
- Establishing and/or integrating policies and procedures for the management of medical waste within the unit waste management plan.

PREVENTIVE MEDICINE PERSONNEL

1-39. PVNTMED personnel are assigned to various Army command staffs, based on mission demands. They serve as technical advisors to the command on pest management, environmental health, and sanitation issues. Within a BCT, PVNTMED support is provided by a PVNTMED section that is organic to the brigade support medical company. Within Marine Corps MAGTFs, PVNTMED detachments are not organically attached as they are within the Army. They often remain in the unit headquarters in general support of the entire task force and AO. PVNTMED tasks that support waste management include the following tasks:

- Identifying health threats associated with waste generation and recommending techniques and procedures to mitigate effects.
- Integrating PVNTMED considerations and preventive measures into waste management planning.
- Conducting sanitary inspections of waste management systems (with a focus on medical facilities and those handling medical waste) and providing PVNTMED assessments and recommendations.
- Conducting and monitoring occupational health surveillance in coordination with the surgeon.
- Performing vector surveillance and pest management services in support of waste management operations.
- Establishing PVNTMED policies and procedures in support of waste management and implementing preventive measures through plans, orders, attachments, and directives.
- Participating in the waste management working group.

MEDICAL DETACHMENT

1-40. The medical detachment, PVNTMED, has the echelons above brigade mission to provide PVNTMED support and consultation in the areas of disease and nonbattle injury prevention, field sanitation, entomology, sanitary engineering, occupational and environmental health surveillance, and epidemiology to minimize the effects of environmental injuries, enteric diseases, vector-borne diseases, and other health threats on deployed forces in the theater. The detachment is capable of—

- Providing surveillance and controlling disease vectors and reservoirs in assigned areas.
- Monitoring pest management, field sanitation, water treatment and storage, waste disposal, and disease and nonbattle injury control practices of units in assigned areas, providing advice and training as necessary.
- Investigating and evaluating pest management, sanitation, water supply, waste disposal practices, and other environmental health-related problems and recommending corrective measures as necessary.
- Conducting medical surveillance activities in the supported area (to include coordinating, compiling, analyzing, and reporting medical surveillance data) to assist in evaluating conditions affecting the health of the supported force.
- Providing limited entomological control of disease vectors and reservoirs in assigned areas.
- Collecting environmental samples and specimens and performing selected analyses or evaluations to assist in the assessment of the health threat.

CHEMICAL, BIOLOGICAL, RADIOLOGICAL, AND NUCLEAR PERSONNEL

1-41. CBRN personnel are assigned to echelon staffs, and they are also represented in some company level organizations. They serve as technical advisors to the command on selected aspects of HW and hazmat that may overlap with possible CBRN concerns. CBRN personnel will have access to specialized equipment to detect certain hazardous compounds that can support surveys and assessments. They have knowledge of—

- Sampling protocols (and equipment to conduct limited sampling).

- Toxic industrial chemicals/toxic industrial material and industrial processes.
- Biological agent indicators.
- Chemical warfare agent indicators.
- Hazmat spill response.
- Personal and collective protective equipment.

WASTE MANAGEMENT WORKING GROUP FACILITATOR

1-42. If the commander establishes a waste management working group, a facilitator should also be appointed to be responsible for the group's collective efforts. The group facilitator is responsible for the following tasks:

- Synchronizing and integrating the group's efforts throughout the operations process.
- Recommending priorities for waste management to the commander to facilitate the allocation of resources.
- Establishing priorities of work to help the group achieve objectives.
- Managing information that the group gathers and generates, identifying waste-related relevant information, and updating the commander and staff to enable situational understanding and facilitate decisionmaking.
- Identifying ways to improve efficiency and effectiveness in managing the unit's waste, based on assessments.

FIRST-LINE LEADERS

1-43. Environmental stewardship and a sense of responsibility for the unit's generated waste must be instilled at the lowest levels. An effective unit waste management plan relies on first-line leaders to—

- Integrate waste management tasks within all operations.
- Keep Soldiers informed on the unit's waste management policies and procedures.
- Ensure that Soldiers understand their individual responsibilities in support of waste management.
- Enforce standards in performing waste management tasks.

BASE CAMP MAYOR/BASE OPERATING SUPPORT–INTEGRATOR

1-44. The base camp mayor or base operating support–integrator is responsible for the overall day-to-day operations of the base camp. With regards to waste management, the base camp mayor is specifically responsible for the following tasks:

- Ensuring that waste and its effects are integrated early into base camp development planning and included in base camp master planning.
- Ensuring that waste management operations are being efficiently and effectively conducted according to policies and procedures established for the theater of operations.
- Assessing the base camp waste management operations (based on the assessments conducted by the engineer staff officer, the environmental officer, and other staff members) and taking appropriate actions to improve effectiveness and enhance mission readiness.
- Conducting compliance inspections to ensure that waste management operations meet established policies and standards.

CONTRACTING OFFICER'S REPRESENTATIVE

1-45. Although the contracting officer has the overall responsibility of ensuring that the laws and regulations are followed for government contracts, the COR is usually delegated the authority to monitor the performance of contract vendors to ensure that they fulfill the requirements of the contract. The COR has the responsibility to—

- Perform acceptance for the government of services provided under contracts.

- Direct the flow of technical matters between the government and a contractor that are clearly authorized within the COR appointment memorandum.
- Maintain liaison and direct communications with the contractor and contracting officer.
- Verify that the contractor has performed the technical requirements of the contract or delivery order according to the contract terms, conditions, and specifications (with special emphasis on the quality provisions) and to the contractor's own quality control program.
- Ensure that implied and specified waste management directives within contracts are being adhered to by contractors, including the requirement that, as a representative of the U.S. Army, contractors are expected to display environmental stewardship and "do what is right."
- Monitor the contractor's performance through inspections and assessments and notify the contractor of observed deficiencies and required actions for correction according to the Quality Assurance Surveillance Plan.
- Perform follow-up inspections to verify that identified contractor deficiencies have been corrected.
- Record and report to the contracting officer any incidents of faulty or nonconforming work, delays, or problems, such as waste-related liabilities that have been incurred as a result of contractor actions or inactions.
- Prepare and submit periodic reports on the performance of services as directed by the contracting officer.
- Conduct in-progress reviews with the contractor on a periodic basis to discuss any significant issues or concerns.
- Coordinate site entry for contactor personnel and ensure that government-furnished property or equipment is available when required.
- Maintain record files that contain memorandums for record, meeting minutes, inspection results, and other documentation pertaining to the acceptance of performance of services that provides a complete history of transactions to support any actions taken by the COR or the contracting officer.

SUPPORTING AGENCIES

1-46. There are additional agencies that may provide assistance and support for waste management planning and development.

U.S. Army Public Health Command/Navy and Marine Corps Public Health Command

1-47. The U.S. Army Public Health Command (USAPHC) and Navy and Marine Corps Public Health Center (NMCPHC) provide health promotion and PVNTMED leadership and services to identify, assess, and counter environmental, occupational, disease, and injury threats to health, fitness, and readiness in support of the mission and the National Military Strategy. They serve as the linchpin for medical support to combat forces and the military managed-care system. They provide worldwide scientific expertise and services in clinical and field PVNTMED, environmental and occupational health, health promotion and wellness, epidemiology and disease surveillance, toxicology, and related laboratory sciences. Professional disciplines represented include chemists, physicists, engineers, physicians, optometrists, epidemiologists, audiologists, nurses, industrial hygienists, toxicologists, entomologists, and many others such as subspecialties within these professions.

1-48. The USAPHC and NMCPHC have experience in preparing and updating integrated waste management plans that conform to regulations and guidance and provide reachback and consultative services. A task-organized team of experts can provide a variety of services in support of deployed forces that include:

- Recycling or composting program consultations that include the assessment of current practices, evaluation of alternatives, and identification of opportunities that will assist units in developing or expanding their programs.
- On-site green procurement training, procurement plan development, and procurement audits.
- Environmental surveys and assessments associated with base camp occupation, transfer, and closure.
- Surface water and wastewater consultation.
- Spill prevention and contingency planning.
- Spill response planning.
- Hazardous, special, and medical waste consultation and reachback support.
- SW characterization studies.

U.S. Army Corps of Engineers/Naval Facilities Engineering Command

1-49. USACE is the Army's direct reporting unit assigned responsibility to execute Army and DOD military construction, real estate acquisition, and the development of the nation's infrastructure through its civil works program. USACE is organized into subordinate divisions, districts, laboratories, and centers that provide a broad range of engineering support to military departments, federal agencies, state governments, and local authorities in a cost-reimbursable manner. USACE supports full spectrum operations through five major functions:

- **Warfighting.** Provides engineering and contingency support for full spectrum operations.
- **Disasters.** Provides response and supports recovery from local, national, and global disasters.
- **Infrastructure.** Acquires, builds, and sustains critical facilities for military installations, theater support facilities, and public works.
- **Environment.** Restores, manages, and enhances ecosystems—local and regional.
- **Water resources development.** Balances requirements between water resources development and the environment.

The Naval Facilities Engineering Command (NAVFAC) is the U.S. Navy and Marine Corps equivalent to USACE with comparable expertise and similar visibility and connotation. See appendix D for contact information.

1-50. As part of its five major functions, USACE provides technical engineering support to deployed forces worldwide, primarily through field force engineering (FFE). FFE leverages reachback to technical subject matter experts throughout the USACE districts, divisions, laboratories, and centers of expertise. FFE is provided by technically specialized personnel and assets (deployed or participating through reachback) or through operational force engineer Soldiers linked into reachback capabilities using teleengineering when necessary. Teleengineering is the communications architecture that facilitates reachback when the existing communications infrastructure will not support it. Every Army engineer headquarters, from battalion through brigade, and the two theater engineer commands are equipped for teleengineering access to FFE reachback support. To link deployed FFE elements with the cells and other expertise they need for additional technical support, USACE operates a reachback operations center to provide a one-stop reachback engineering capability that is enabled by deployable teleengineering communications equipment. This reachback operations center enables deployed personnel to talk directly with experts when a complex problem in the field needs quick resolution. See FM 3-34 for more information on FFE.

1-51. The USACE organization for FFE includes deployable and nondeployable resources with a variety of critical specialties and skills. FFE deployable teams are force-tailored and serve as forward planning,

execution, or liaison teams to support full spectrum operations; nondeployable resources offer dedicated reachback support to the deployed teams and engineer Soldiers in need of technical support. *Force tailoring* is the process of determining the right mix of forces and the sequence of their deployment in support of a joint force commander. (ADP 3-0) USACE-deployable FFE teams that can provide technical support for waste management operations include the—

- **FEST-Main.** The FEST-main provides construction management, real estate, environmental, geospatial, and other engineering support, typically at the theater echelon level, and can provide command and control for deployed FFE teams. This team would typically support a joint task force or the land component of a joint task force, task-oriented to that headquarters or to a supporting engineer headquarters. The FEST-main operates as augmentation to the joint force engineer staff or the engineer headquarters element or may operate as a discrete headquarters element. It conducts a variety of core essential tasks in support of stability operations, consequence management or civil support, and technical engineering missions. It requires sustainment and security support from the gaining or supported unit.
- **FEST-Advance.** The FEST-advance provides infrastructure assessment; engineer planning and design; environmental, geospatial, and other technical engineering support from theater to brigade echelon; and augments the staff at those echelons. The FEST-advance typically operates as augmentation to the supported force engineer staff or the supporting engineer headquarters. It is designed to receive task-organized contingency real estate team and environmental support team elements when those capabilities are required. In some cases, a FEST-advance may provide FFE support within an assigned area as a subordinate element of a FEST-main.
- **Environmental support team.** It conducts environmental management tasks in support of base camps and other technical engineering missions. The environmental support team is typically task-organized as part of a tailored FEST and conducts environmental assessments, baseline and other surveys, and studies. This team could support any echelon, but will typically be tailored in support of an Army component headquarters configuration with support missions requiring base camp development management. The environmental support team operates as augmentation to the supported force engineer staff or the supporting engineer headquarters. The team should be deployed as an initial element to perform assessments and identify environmental hazards. It should remain (or redeploy) as one of the last elements to provide remediation actions and support for base closure.

1-52. The nondeployable resources provide dedicated engineering assistance in response to requests from the deployed teams or from engineer Soldiers in the operational area. These resources consist of personnel with the technical capabilities to fulfill a variety of complex technical problems submitted as reachback requests. The USACE Reachback Operations Center (UROC) consists of civilian and military personnel. Its mission is to provide rapid, relevant, and reliable solutions across the full operational spectrum. Its reachback engineering capability allows deployed personnel worldwide to talk directly with experts when a problem in the field needs quick resolution. UROC personnel are trained to exploit the entire array of expertise within the USACE laboratories, centers of expertise, base camp development teams, USACE divisions and districts, other DOD or U.S. government agencies, and other organizations. Refer to appendix D for contact information.

1-53. The base camp development teams are managed and trained by the UROC district in which they are located and are operationally controlled by the UROC during their specified rotational readiness cycle. They provide base development engineering, master planning, and facilities design for staging bases, base camps, forward operating bases, displaced persons camps, and similar locations Its focus areas include the engineering-related planning and development issues involved in locating, designing, constructing, closing, and transferring base camps.

This page intentionally left blank.

Chapter 2

Waste Management Integration

The successful integration of waste management into operations requires a thorough understanding of the unit's waste requirements and capabilities and a practical ability to balance environmental stewardship and mission requirements in applying feasible, suitable, and sustainable waste management solutions. This chapter focuses on describing "how" waste management is integrated throughout the operations process. The discussion presented in this chapter provides the basis for developing waste management plans for the specific types of waste presented in part two of this manual.

OVERVIEW

2-1. Waste management is integrated throughout the operations process as shown in figure 2-1. As described in ADP 3-0, the operations process consists of the major command and control activities that are performed during operations and is driven by battle command. The cyclic activities of the operations process may be sequential or simultaneous. They are usually not discrete; they overlap and recur as circumstances demand.

2-2. As the primary staff integrator for the environmental program (which includes waste management), the engineer staff officer works with other members of the staff and/or the waste management working group in performing waste management tasks throughout the operations process. This ensures an understanding of the negative effects of generated waste and enables decisionmaking in implementing solutions to minimize those effects. The commander may establish a waste management working group that consists of engineers, CORs, logisticians, transporters, PVNTMED personnel, and other members of the staff as required to focus on solving waste-related problems, reducing waste generation, and coordinating waste management actions.

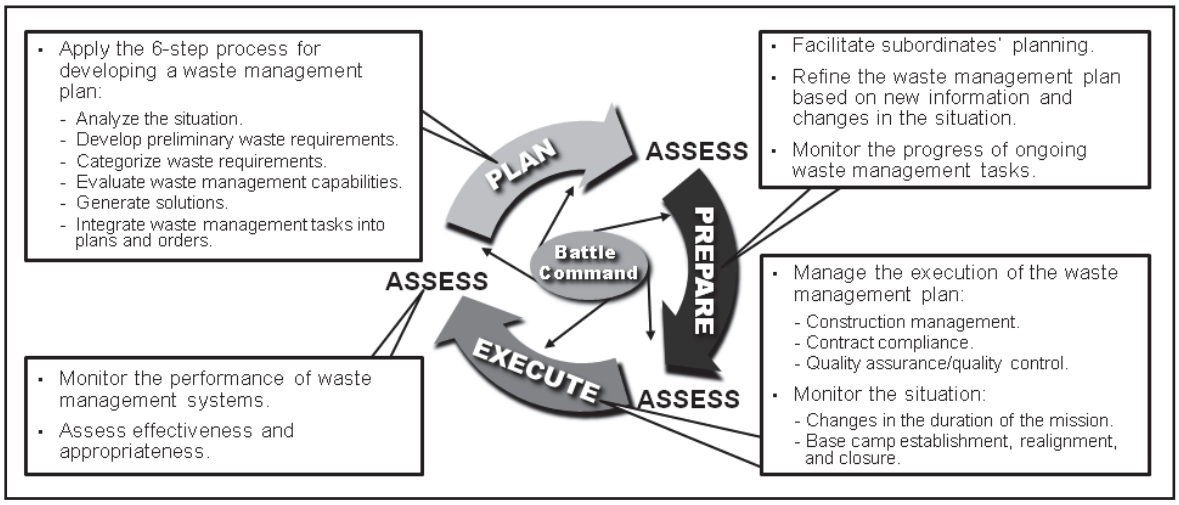

Figure 2-1. Waste management throughout the operations process

PLANNING

2-3. Commanders and staffs use the MDMP described in ADP 5-0 to develop the necessary, detailed information that will be needed during execution. Waste management planners should participate in every aspect of the MDMP to ensure that waste management is integrated into planning and that waste management tasks are coordinated and synchronized within the concept of operations as it is developed. Table 2-1 shows waste management considerations in relation to the seven steps of the MDMP.

2-4. Waste management planners will meet and/or the waste management working group will convene at appropriate times throughout the MDMP to synchronize their efforts and consolidate the waste-related information being generated and gathered from their respective functional area. As waste-related relevant information is identified, it is disseminated to the appropriate staff sections for further analysis to determine operational impacts from their perspective and for inclusion in their running estimates to enable SU. Managing information, focusing on obtaining relevant information, and preventing information overload are fundamental to effective planning. A planning SOP should be developed that describes roles and responsibilities for waste management planners and/or members of the waste management working group. The SOP should also stipulate who attends certain events during the MDMP and specify expected inputs and outputs.

2-5. Waste management planners must incorporate parallel and collaborative planning to leverage the information resources and planning support capabilities of higher headquarters and supporting units. Collaborative planning is the real-time interaction among commanders and staffs at two or more echelons who are developing plans for a particular operation. An example of collaborative planning is waste management planners at the BCT level who are planning the establishment of a composting operation within the BCT area of operations, with a specialized engineer unit providing general support to the theater of operations.

Table 2-1. Waste management considerations during the MDMP

MDMP Steps	*Waste Management Considerations*
Receipt of the mission	• Update running estimates. • Identify potential sources of waste-related data and information to include relevant assessment products (such as existing EBSs, OEHSAs, and infrastructure assessments). • Request waste-related information and technical expertise from supporting units/agencies and higher headquarters through requests for information (RFIs) and reachback. • Disseminate waste-related information, as it is gathered, to the appropriate staff sections for inclusion in their running estimates.
Mission analysis	• Analyze the unit's waste streams to determine waste requirements. • As part of IPB, evaluate terrain, weather effects, and threat capabilities to determine potential impacts on waste management operations. • Assess the availability of existing waste management infrastructure/facilities within the operational area, and— ▪ Develop facts and assumptions to support assessments. ▪ Confirm or deny assumptions with RFIs, on-site reconnaissance, and infrastructure assessments when possible. • Identify specified and implied tasks that pertain to waste management. • Assess the availability of waste management capabilities to include joint and multinational forces, and local and nonlocal contractors. • Determine constraints, such as— ▪ International and U.S. laws and regulations as applicable. ▪ HN laws, local customs, and local practices. ▪ Joint and Army directives and regulations. ▪ Higher headquarters policies, procedures, operation plans/orders, and directives. ▪ Allowable design and construction standards contained in theater-specific guidelines (such as U.S. Central Command Regulation 415-1).

Table 2-1. Waste management considerations during the MDMP (continued)

MDMP Steps	*Waste Management Considerations*
Mission analysis (continued)	• Conduct a risk assessment as demonstrated in FM 5-19 • Submit IR through appropriate channels. • Begin identifying and coordinating possible solutions for immediate, basic, expanded, enhanced, and transfer and closure waste requirements. • Recommend priorities of effort and priorities of support for the commander's approval. • Coordinate tasks that support waste management solutions, particularly those tasks that have long lead times.
COA development	• Refine waste requirements and possible solutions, based on the array of forces. • Recommend areas that should be used, based on the— ▪ Availability of existing waste facilities. ▪ Suitability for accommodating disposed waste. • Recommend areas that should be avoided (such as environmentally sensitive areas; cultural, religious, and historical sites; and areas that impact the local population).
COA analysis	• Determine evaluation criteria (for example, the waste management fundamentals described in chapter 1) that will help evaluate the COAs from a waste management perspective. • Inject realistic and relevant waste-related situations or scenarios into wargaming (for example, how will Task Force 1 dispose of waste if positioned in AA Viking for more than a week?).
COA comparison	• Evaluate the advantages and disadvantages of each COA from a waste management perspective, using the evaluation criteria established during COA analysis.
COA approval	• Include updates on waste management issues or concerns within the COA decision brief to the commander as appropriate.
Orders production	• Integrate waste management tasks within operation plans, orders, and attachments (see appendix B for a sample waste management appendix that can be included in the engineer or sustainment annex).

Legend:

AA	assembly area
COA	course of action
EBS	environmental baseline survey
FM	field manual
HN	host nation
IPB	intelligence preparation of the battlefield
IR	information requirements
MDMP	military decisionmaking process
OESHA	occupational environmental and health site assessment
RFI	request for information

2-6. During mission analysis, waste management planners focus on analyzing the unit's waste streams to determine the waste requirements for each stream and on prioritizing waste streams early in the planning phase to help focus planning efforts and allocate resources. The prioritization of waste streams is based on an assessment of hazards and associated risks to human health, the environment, and the mission. Waste management planners identify and describe health and environmental hazards associated with generated waste to the staff. See appendix A of this publication and FM 5-19 for more information. Health and environmental hazards are assessed, and risk (low, moderate, high, or extremely high) is assigned in terms of probability (frequent, likely, occasional, seldom, or unlikely) and severity (catastrophic, critical, marginal, or negligible). Recommended priorities of effort and priorities of support are then presented to the commander in a timely manner so that they can be included in the commander's initial planning guidance. As the situation develops and more information becomes available, the commander is updated and priorities are adjusted as necessary.

2-7. As waste streams are analyzed and waste requirements are identified, waste management requires a 6-step process to develop a specific plan and meet the requirements for each type of waste. The six steps for developing a waste management plan are—

- **Step 1.** Analyze the situation.

- **Step 2.** Develop preliminary waste estimates.
- **Step 3.** Categorize waste requirements.
- **Step 4.** Evaluate waste management capabilities.
- **Step 5.** Generate solutions.
- **Step 6.** Integrate waste management tasks into plans and orders.

2-8. These six steps are performed parallel with the MDMP steps, since waste management planners must often work ahead in developing and coordinating their recommended solutions to ensure that they are feasible before they are integrated into each maneuver COA being developed. Some of the preparatory tasks or actions within each of the six steps may be performed concurrently or in advance to maximize the time available for planning.

STEP 1. ANALYZE THE SITUATION

2-9. Waste management planners use METT-TC to frame the waste situation. The engineer staff officer or the waste management working group facilitator (which could be the engineer staff officer, the S-4, or whomever the commander designates) establishes priorities and focuses waste management planners' efforts in assessing the situation to ensure a unity of effort and to avoid any duplication of effort. Information is gathered through intelligence, surveillance, and reconnaissance collection (including infrastructure reconnaissance and assessments) and through the submission of requests for information (RFIs) to lower, adjacent, and higher units. Information requirements are identified collectively, and then each planner gathers the necessary information within their area of expertise through their respective staff section or through reachback. For example, the engineer staff may pursue waste-related information through reachback to USACE support centers, while PVNTMED personnel might coordinate through USAPHC channels. When possible, predeployment site surveys or on-site reconnaissance is conducted to verify actual conditions and the availability and status of existing facilities.

2-10. Information management is critical to this step. Waste management planners must work together to determine how waste-related information will be generated, gathered, stored, and disseminated to ensure that the right information is provided to the right people, at the right time, to facilitate decisionmaking. It is particularly important to avoid sending redundant or irrelevant RFIs to higher headquarters (or through reachback) and to ensure that RFIs from subordinate units are responded to in a timely manner. ADP 6-0 provides more information on information management.

Mission

2-11. Waste management planners consider the expected duration of the mission and the nature of the operation. In general, the duration of the mission is directly proportional to the amount of resources that should be invested in waste management systems.

Waste management planners study the nature of the operation and the threat to assess the extent that civilians (local and nonlocal contractors) may be used in executing the waste management plan. When the security situation is such that civilians cannot safely operate, Army units must play a more prominent role in performing waste management tasks. In consideration of the mission, waste management planners analyze—

- The types and amounts of waste that will be generated (based on the type, size, and functions of units within the task organization).
- The mobility and dispersion of the force and the reliance on centrally located fixed sites or decentralized field-expedient methods.

- The types of operations and likely areas where friendly forces will be positioned and the amount of time that forces will be in those areas.
- The expected duration of the mission to determine appropriate waste management system design, performance, and construction standards.

Enemy

2-12. Waste management planners assess the effects of the enemy or the security situation on waste management operations and assess the threats to friendly forces and local and nonlocal contractors that may be used to perform waste management tasks. Some waste management considerations within this variable include—

- Protection requirements for hazmat/HW storage areas, based on threats.
- Security requirements that may restrict the access of non-U.S. contractors (local and nonlocal) onto U.S. base camps.
- Areas where certain local and nonlocal contractors cannot be used based on threats.
- Threats to transporting waste from collection points to recovery or disposal sites.
- Waste items (such as empty gas cylinders and mail that contains personal addresses) that will require demilitarization or destruction before disposal to prevent them from being reused or exploited by the threat.

Terrain and Weather

2-13. Waste management planners evaluate the effects of terrain and weather on waste management operations. They review existing geospatial information (including environmental and biological hazards) on potential base camp areas, reinforced with on-site reconnaissance and infrastructure assessments when possible. Geospatial engineering support, in the form of terrain analysis and tailored geospatial products, should be requested through appropriate channels to better understand and visualize the effects of terrain. See Army Tactics, Techniques, and Procedures (ATTP) 3-34.80 for more information. Waste management planners focus on the following terrain characteristics:

- Surface configuration and its effects on land use.
- Soil composition and its effects on system design, performance, and construction.
- Hydrology and the effects of surface and subsurface drainage on waste management operations.
- Man-made features (such as roads and existing waste facilities) that can be used to conduct waste management operations.

2-14. Waste management planners consider the effects of weather on the design and performance capabilities of waste management systems. Weather information is normally prepared by staff weather officers and distributed through assistant chief of staff, intelligence/intelligence staff officer tactical networks. The primary weather conditions that waste management planners should consider are—

- **Temperature and humidity.** Extreme temperatures can affect the efficiency and effectiveness of waste management systems, decomposition, and vector reproduction. Hot and dry conditions favor evaporation, while extreme cold can impede digging and freeze water which affects the flow of wastewater through piping systems.
- **Precipitation.** Rain and snow can affect road trafficability and impact the ability to transport waste. Heavy rainfall can render low-lying areas unusable, and stormwater runoff can cause containment systems to overflow and contaminate surrounding areas.
- **Wind.** Prevailing wind direction is useful in positioning the waste management system to help keep odors, toxic smoke, and fumes away from troop billeting, work areas, and residential areas.

Troops and Support Available

2-15. Waste management planners determine the availability of engineer, transportation, and logistics units and specialized equipment (such as earthmoving and material-handling equipment) within the task organization that can be used to perform waste management tasks. They also assess the amount of construction materials on hand or readily available through the supply system and the ability to perform

troop and/or contractor construction, based on the availability of manpower, funding, and contracting support. Waste management planners also consider other available support within the theater of operations that includes—

- Joint and multinational engineering, logistics, and transportation units.
- Specialized engineer units, such as FESTs.
- Army PVNTMED detachments.
- Local and nonlocal contractors. Planners must determine if there are any areas that are not suitable for the use of certain local or nonlocal contractors, based on ethnic, religious, or political boundaries.
- Commercially available, specialized equipment (such as industrial compactors, shredders, and incinerators) and construction materials that can be acquired through local purchase or contracting.
- USACE and USAPHC support and assistance teams (including availability through reachback).
- Governmental and nongovernmental organizations.

2-16. Based on the specified and implied waste management tasks identified during mission analysis, waste management planners perform a troop-to-task analysis to determine any obvious shortfalls, and they request support or augmentation through the proper channels. It is important to identify any shortfalls or special equipment requirements as early in the planning phase as possible. Long lead times will often be required in coordinating for specialized engineer teams, USACE and USAPHC support, and assistance teams since they will likely be in high demand, especially during the initial onset of operations. When considering the use of contractors, the availability of funds is also a factor. Funding shortfalls must also be identified and submitted through appropriate channels as early in the planning phase as possible. When additional support is not available, waste management planners must be prepared to rely on technical expertise available through reachback.

Time Available

2-17. Waste management planners determine the time available for planning and ensure that waste management planners within subordinate units are provided approximately two-thirds of the total time available for planning. As waste management planners begin developing possible solutions, they consider the estimated times of arrival for organic and augmenting troops and equipment that are needed for performing waste management tasks. They also consider the time required for acquiring the necessary funding and approval for local purchases and for contracting services and support.

Civil Considerations

2-18. Waste management planners ensure that the commander and staff fully understand the immediate and long-term effects of waste on all human beings within the operational area and on the environment. This includes the effects on—

- Environmentally sensitive areas, such as historical, cultural, or religious sites and food and water sources.
- Flora and fauna inhabiting the operational area, especially those that are endangered species.
- Troop billeting and work areas.
- Local residential areas.
- Local infrastructure that could be affected by transporting or disposing of waste, such as the wear and tear on roads.
- Ground and surface waters.
- Agricultural support or impacts.

2-19. Information on health and environmental hazards may be found in existing environmental baseline surveys (EBSs) and OEHSAs that may have been prepared for areas previously occupied by U.S. or multinational forces. EBSs and OEHSAs are also helpful in selecting the best methods for disposal and in determining what infrastructure is needed and/or available for performing waste management activities. The EBS focuses on the impact of the base population, mission, and occupation on the environment;

documents the existing environmental conditions of an area occupied by U.S. forces; and tracks changes that occur during occupation. The occupational and environmental health site assessments is focused on the occupational health conditions found at a location and uses the process of a conceptual site model to identify potential exposure pathways for chemical, biological, and radiological hazards that may affect the health of deployed personnel. More information on these assessments can be found in the U.S. Army Engineer School *Environmental Baseline Survey and Occupational and Environmental Health Site Assessment Handbook: Contingency Operations (Overseas)*.

STEP 2. DEVELOP PRELIMINARY WASTE ESTIMATES

2-20. Preliminary waste estimates for each type of waste are developed during mission analysis and continually refined as planning progresses and more information becomes available. Preliminary waste estimates are developed for each subordinate unit (one level down), while looking two levels down. Table 2-2 shows a sample matrix of comprehensive preliminary waste requirements. This work sheet is generated based on the work sheets created for each type of waste and can incorporate all subordinate units and all phases of an operation if phases are being used. It is intended to provide an overview of the projected waste, based on the mission. A complete explanation of how to determine waste requirements for each type of waste is provided in part two of this manual.

Table 2-2. Sample comprehensive preliminary waste requirements work sheet

Subordinate Units	*Immediate*			
	Nonhazardous SW (pounds/day)	*Wastewater (gallons/day)*	*HW and Special Waste*	*Medical Waste*
Battalion 1 (700 personnel)	2,800	1,400	• Maintenance activities • Contaminated soil	MTF
Note. This work sheet may be expanded to incorporate all subordinate units and all categories of waste requirements (immediate, basic, expanded, enhanced, transfer and closure).				
Legend: HW hazardous waste MTF medical treatment facility SW solid waste				

2-21. Preliminary waste requirements begin as a rough estimate of the total quantities of each type of waste that are expected to be generated per day, based on the number of personnel within a unit or the type of tasks or activities that will be performed by the unit or in support of that unit. These estimates are created using planning factors and other information that may be available, based on historical data from similar operations and are shown as pounds per day for solids and gallons per day for liquids. When estimated quantities cannot be determined for a particular waste stream (which may often be the case with hazardous, special, and medical waste), the primary or likely sources (which could be an activity or task) of that waste stream should be annotated to help focus waste management planners' and other staff members' efforts in generating or gathering additional information.

2-22. At the conclusion of mission analysis, waste management planners should have a firm grasp of the unit's preliminary waste requirements, based on—

- The unit's task organization.
- Specific unit functions (such as maintenance, medical, and food services).
- Equipment densities.
- Basic loads and stockage lists for parts and supplies.
- Hazmat inventories and material safety data sheet (MSDS).
- An analysis of METT-TC variables.

2-23. Preliminary estimates are distributed to the appropriate staff sections (primarily the staff sections that are represented in the waste management working group) for further analysis and to help them identify capability shortfalls and operational impacts within their functional area. The resulting waste-related

information is then consolidated and included in the engineer staff officer or the assistant chief of staff, logistics (G-4)/S-4 portion of the mission analysis brief to ensure that the commander understands the potential impacts of waste on Soldiers, the environment, and the mission. Waste estimates are also disseminated through appropriate channels to subordinate units and supporting units to facilitate collaborative and parallel waste management planning.

STEP 3. CATEGORIZE WASTE REQUIREMENTS

2-24. The waste requirements for each type of waste identified for each subordinate unit (one level down) are categorized, based on expected duration or occurrence. The categories of waste requirements are—

- **Immediate(less than 72 hours).** In the immediate category, the main concern for waste management planning will be solutions for disposal of SW and black water. Gray water, hazardous, and medical waste generation will be minimal, based on mission activity.
- **Basic (sustain operations for a minimum of 60 days).** In the basic category, field expedient methods used in the immediate category will be continued until more permanent solutions can be instituted. The implementation of an integrated SW management plan will begin with source segregation of waste at the point of generation and a properly constructed burn pit established until an incinerator can be purchased, received, installed, and operation and maintenance contracts established. Contracts will likely be developed for wastewater management until a lagoon system or wastewater treatment package plant can be established. HWAPs will be established at the appropriate level for proper management of hazardous waste.
- **Expanded (sustain operations for a minimum of 180 days).** In the expanded category, more sustainable methods of waste management should be in place. The integrated SW management plan will continue to be improved upon. Burn pits will no longer be allowed to operate without approval, and incinerators should be in place where appropriate. Wastewater lagoons or package wastewater treatment plants will be established.
- **Enhanced (undetermined end state).** Same as the expanded category.
- **Transfer and closure (as required).** In the transfer and closure category, guidance will be received from the theater command regarding what will be transferred to the HN and what will be returned to its original condition within the base camp site.

2-25. For example, the wastewater requirements for a unit on the move or in an assembly area are categorized as immediate requirements if the anticipated duration of that requirement is less than 72 hours for a specific location. Once that unit reaches a location where a base camp will be established for a minimum of 60 days, its wastewater requirements are categorized as basic requirements.

2-26. Categorized waste requirements are shown for each subordinate unit (as shown in table 2-2) where they will provide the focus for the generation of solutions in step 5 of the planning phase. Requirements are also organized by critical friendly event or phase of the operation (if the operation is phased) to show its relation to the concept of operations. The full range of waste requirements is prepared to the fullest extent possible, based on the best information that is currently available, for each COA being developed. When uncertainties arise, RFIs are submitted to higher headquarters and/or assumptions are made to facilitate the continuation of planning.

STEP 4. EVALUATE WASTE MANAGEMENT CAPABILITIES

2-27. This step can begin as early as mission analysis and will continue through COA approval. During this step, waste management planners evaluate the available resources (manpower, equipment, materials, and funding) for each subordinate unit (one level down) according to the proposed task organization for each COA being developed. This evaluation determines a unit's ability to meet its waste requirements according to established design, performance, and construction standards. When an obvious shortfall exists, the unit is reinforced with additional support or provided additional resources (such as funding) that allow it to generate its own capabilities or acquire the needed support or services through contracting. Part of this analysis must also include an assessment of the unit's ability to sustain waste management systems that it employs, which may require sustainment training or special maintenance and services to meet or extend the

design life or performance capabilities of the system. Waste management planners can create and use a simple matrix that shows requirements and capabilities to help identify shortfalls.

STEP 5. GENERATE SOLUTIONS

2-28. As planning progresses and waste management planners improve their understanding of the unit's waste requirements and waste management capabilities, they begin generating options or possible solutions to meet those requirements. As solutions are being developed, the tasks that are needed to support those solutions are integrated into the MDMP at the appropriate time for coordination and synchronization within the staff. Assuming LOGCAP will handle this solution is not a good COA without providing detailed planning objectives, timelines for execution, and overall management expectations.

2-29. Waste management planners begin generating options as waste requirements are determined. They consider options provided in doctrinal manuals, lessons learned, and other sources of information available through the Internet or shared networks. They also consider local practices that can be adapted to fit the unit's need, especially in meeting immediate and basic requirements. They seek the advice of subject matter experts residing within the unit, supporting units, assistance teams, higher headquarters, or support centers that are available through reachback to help uncover and explore the full range of possibilities.

2-30. Options or possible solutions are considered, based on an analysis of the mission variables and an evaluation of the unit's waste management capabilities that were described earlier. Waste management planners identify the required tasks that must be performed to implement each possible solution as it is being developed and then perform a troop-to-task analysis to determine the required manpower (including skill sets) and resources that are needed. Waste management planners coordinate with other staff members within the unit and with other waste management planners within lower, adjacent, and higher units as necessary. They conduct further analysis to ensure that possible solutions being developed are supportive of policies and procedures established for the theater of operations and exhibit the following characteristics:

- Feasible, based on the availability of—
  - Manpower (and skill sets).
  - Equipment.
  - Materials.
  - Funding.
  - Contracted support.
- Suitable, based on—
  - Terrain characteristics, such as soil composition, surface configuration, and slope.
  - Weather conditions, such as prevailing winds, humidity, and precipitation.
  - Environmental considerations, including environmentally sensitive areas and historical and cultural sites.
  - Health considerations in terms of health risk severity and probability and the ability to mitigate risk.
  - Cost effectiveness in terms of initial and sustainment costs.
- Sustainable, based on—
  - Mission demands.
  - Environmental considerations.
  - The acceptance or tolerance of the local population, HN, and the U.S. public.
  - Allowable design and construction standards.
  - Cost effectiveness in terms of initial and sustainment costs.

2-31. Waste management planners generate options and develop a tailored waste management plan for each maneuver COA being developed. They participate in COA development and analysis and alert the staff to potential hazards associated with waste and potential waste management shortfalls, based on the troop-to-task analysis that was performed for each supporting waste management task. This allows mission planners to make immediate adjustments (or assume risks) to ensure that maneuver COAs remain feasible (from a waste management perspective) as it is further developed.

STEP 6. INTEGRATE WASTE MANAGEMENT TASKS INTO PLANS AND ORDERS

2-32. Once a COA is selected and approved by the commander, waste management planners finalize the waste management plan that supports that COA. The waste management plan provides details on the tasks that need to be performed (by whom, when, and to what standard) to achieve objectives for each of the four major waste management activities (collect, transport, recover, and dispose). The plan also includes priorities of support and priorities of effort (work) for each phase of the operation. It also incorporates theater-specific guidance (such as Central Command's Regulation 415-1) and orders and directives that are provided by higher headquarters and describes the design, performance, and construction standards that are enforced through leader supervision and inspections. The following areas must also be addressed in operation plans and orders, unless they are already covered in a unit SOP:

- Requirements for training or certification of personnel performing waste management tasks.
- Requirements for establishing collection and accumulation sites.
- Requirements for secondary containment.
- Requirements for containers and container labeling.
- Considerations for general safety associated with handling, storing, and transporting the various waste streams that will likely be generated or encountered during the course of the operation.
- Procedures for characterizing, documenting, and marking HW and special waste.
- Procedures for handling and disposal, including turn-in and transportation requirements.
- Procedures and requirements for spill prevention, response, and reporting.
- Plans for inspections, including the checklists that will be used.
- Requirements for record keeping, to include any additional chain of command requirements.

2-33. Waste management planners develop the necessary waste management tasks that will be performed by subordinate units in executing the waste management plan. Each task contains a purpose. Waste management planners review the troop-to-task analysis that was previously performed for each task to ensure that the unit assigned that task has the necessary capabilities and resources to perform it. The waste management tasks included in plans and orders are usually placed in the engineer annex, the sustainment annex or, as directed, in the unit planning SOPs. Waste management tasks can be provided in a matrix format and embedded within, or attached to, an annex (see appendix B for a sample waste management appendix).

PREPARATION, EXECUTION, AND ASSESSMENT

2-34. Waste management planning will continue into preparation and execution. Waste management planners make changes to the waste management plan as adjustments are made to the maneuver plan, based on changes in the situation and the availability of new information resulting from intelligence, surveillance, and reconnaissance operations.

PREPARATION

2-35. Mission success depends as much on preparation as planning. Preparation creates the conditions that improve friendly forces' opportunities for success. The waste management plan should be rehearsed, especially those aspects of the plan that are critical or complex. The G-4/S-4 ensures that subordinate units performing resupply operations have been provided the necessary instructions for back-hauling wastes (for example, the locations and points of contact for waste collection and accumulation points or disposal sites and special instructions for safely handling and transporting HW and special waste). When possible, waste management rehearsals should be conducted in conjunction with other rehearsals, such as the unit's sustainment rehearsal.

2-36. A key preparation activity is planning refinement, based on situation updates and the answering of information requirements resulting from intelligence, surveillance, and reconnaissance collection, RFIs, and reachback. Waste management planners collectively monitor ongoing preparatory actions within their respective functional areas, which includes the continual gathering, generation, and refinement of waste-related information. Each member of the waste management working group provides timely updates to the group's facilitator, who then determines waste-related relevant information that is disseminated through the

appropriate channels to facilitate decisionmaking. Concurrently, waste management plans are reviewed and refined, based on changes in the situation, which might include the following:

- Revised unit arrival dates, based on deployment and movement timelines, which could affect the availability of waste management capabilities, such as specialized engineer teams or assistance teams.
- Increases in protection measures, based on threats, which could impede movements or restrict local or nonlocal contractor access to base camps.
- Additions to the task organization that could increase waste generation estimates and exceed the design capacities of the current waste management plans.
- Changes in the availability or status of waste management resources (such as existing facilities, incinerators, or chemical latrines).
- Changes in the concept of operations and the positioning of forces into areas not previously considered.

2-37. During preparation, waste management planners begin planning and coordinating for future waste management systems that may be necessary to provide expanded or enhanced capabilities. Initiating engineering construction projects will often require long lead times to acquire the necessary funds, construction materials, project approvals, and contracting support. Waste management planners must often look further in advance than the typical tactical planning windows that are observed at brigade and below. During preparation, waste management planners may also become involved in BCDP that is being initiated by the higher headquarters or by a supporting engineer unit assigned to that task. See Engineer Pamphlet (EP) 1105-3-1 for more information on BCDP.

2-38. During preparation, waste management planners facilitate subordinates' planning, to include the following:

- Participating in collaborative planning.
- Coordinating for technical expertise when reachback is unavailable to subordinate units.
- Responding to RFIs.

EXECUTION

2-39. Execution is putting the plan into action. It involves monitoring the situation, assessing the operation, and adjusting the order as needed. Commanders continuously assess the operation's progress, based on information from the common operational picture, running estimates, and assessments from subordinate commanders.

2-40. During execution, waste management planners focus on monitoring the situation with regards to METT-TC variables. They monitor the capability of waste management systems and anticipate when the maximum capacity and/or established health and environmental thresholds will be exceeded, based on increased demands due to unit task organization changes or base camp expansion. They also monitor the suitability of waste management systems, based on the applicable base camps construction standards established for the theater of operations (such as those contained in Central Command's Regulation 415-1 and environmental SOP), which will tend to become more enduring as the theater matures. Waste management planners upgrade waste management systems as necessary; establish triggers or change indicators that provide ample lead time for planning, approving, acquiring, and implementing improvements; and work closely with base camp managers and planners to incorporate waste management initiatives within base camp master planning. Waste management planners monitor such things as—

- Changes in the duration of operations.
- Changes in the types of operations being conducted that could generate an increase to a particular waste stream.
- Situations that may prompt base camp realignments, transfers, and closures that can affect base camp populations.

- Situations where units may become stationary in one area longer than expected.
- Changes in threat conditions that will impede the transportation of waste or the access of local or nonlocal contractors onto base camps.
- Changes in the terrain due to human or natural causes that will affect trafficability or access to roads and other infrastructure used in transporting waste.
- Changes in weather, such as shifts in wind directions or heavy rainfall that can affect the performance of waste management systems.
- Status of funding, project approvals, contracting, and construction of waste management systems.
- Status of waste collection, storage, disposal sites, and other critical components of the waste management plan.
- Linkups and integration of augmenting or supporting units, such as specialized engineer teams or USAPHC assistance teams.

ASSESSMENT

2-41. During planning, assessment focuses on understanding the current conditions in the operational environment and developing relevant COAs. During preparation and execution, it emphasizes evaluating progress toward the desired end state, determining variances from expectations, and determining the significance (challenge or opportunity) of those variances.

2-42. Waste management planners monitor and evaluate the current situation and the effectiveness of waste management operations using measures of performance and measures of effectiveness. Measures of performance answer the question, "Was the task performed as the commander intended?" Measures of effectiveness answer the question, "Is the unit doing the right things?" They also monitor the design capacities of collection, storage, and disposal sites, based on actual input, and evaluate whether field-expedient methods remain suitable for the situation, based on health, environmental, and civil considerations. As base camps become more developed, waste management planners and/or the waste management working group must evaluate the appropriateness of temporary waste management systems, based on the construction standards that are established for the theater of operations.

2-43. Running estimates serve as tools for assessing waste management operations. Feedback from subordinate units in the field is also used in making assessments. Self-assessment checklists can be created and distributed to the units or personnel that are assigned responsibilities for collection, storage, and disposal sites to help assess effectiveness.

2-44. The waste management working group should convene on a regular basis to share and consolidate information and collectively determine the effectiveness of the waste management plan and the improvements that need to be made. The waste management working group facilitator should brief the commander and staff on a recurring basis to maintain visibility and command emphasis on the unit's waste management plan.

PART TWO

Waste Categories

Part two of this manual is focused on providing the "how to" for developing the integrated waste management plan and dedicates an individual chapter to each of the waste categories. Each chapter uses the 6-step process that was described in chapter 2 to outline the discussion of the unique aspects of each type of waste that must be considered in tailoring waste management solutions to meet requirements. Each chapter concludes with special considerations that are applied in support of base camp transfer and closure.

Chapter 3

Nonhazardous Solid Waste

This chapter describes the components of a nonhazardous SW management system and explains how planners use the 6-step process described in chapter 2 to develop a plan for managing nonhazardous SW.

OVERVIEW

3-1. SW is any material or substance (solid or liquid) that is inherently waste-like because it is no longer suitable for its originally intended purpose or is no longer needed and will be discarded. SW includes HW and special waste, wastewater, and medical waste. Nonhazardous SW is any waste material that does not exhibit a hazardous characteristic; it is generally recognized as garbage or general refuse. Nonhazardous SW includes items such as discarded paper, plastic, cardboard, wood, metal, glass, construction debris, and food waste. The primary components of a nonhazardous SW management system are segregation, collection, transportation, recovery, and disposal.

MANAGEMENT SYSTEM

3-2. Segregation, collection, transportation, recovery, and disposal are all necessary for successful and effective waste management.

SEGREGATION

3-3. Source segregation is absolutely key for any SW management solution. Segregation is each individual's responsibility and begins when waste is placed into the appropriate container as it is generated. To facilitate segregation, containers should be labeled in a manner that prevents waste from being mistakenly placed in the wrong container, even in the dark. Segregation at the point or source of generation reduces the handling requirements during recovery and disposal and makes after-collection segregation more effective and efficient. Segregation is especially critical to recycling efforts. If recyclable materials are mixed with garbage, especially food waste, they are generally rendered nonrecyclable and end up being disposed of in a less desirable manner, such as general refuse or garbage. Source segregation is not difficult and makes a huge difference in the health and safety of the environment. Segregation processes are easiest to initiate at larger generating sources and demonstrate the greatest program success with the largest percentage of materials diverted from burn pits or landfills (for example, Army and Air Force Exchange Services, dining facilities, and logistics centers on any base). Post consumer segregation is typically the most equipment-intensive and shows the least success.

COLLECTION

3-4. Nonhazardous SW is moved from individual points of generation to established collection sites, where it is then transported to a recovery or disposal site. At the point of generation, nonhazardous SW should be placed in clear disposable plastic bags (to allow visibility of materials in the bag, providing one more check to prevent items such as uniforms or sensitive items from entering the waste stream), tied, and consolidated as soon as practical at designated waste collection points. Bagging items such as cardboard boxes may not be practical. Items like this should be broken down and bound, banded together, or situated to ease handling, prevent littering during movement, and reduce volume. Dining facility waste should be segregated as much as possible to prevent contamination of other components.

3-5. Collection points should have the appropriate number of containers to accommodate the various types of waste to be segregated and should be correctly sized to handle the amount of garbage that will be generated in the immediate area. Collection points should use closeable containers, such as dumpsters or garbage cans with lids. They should be leak-proof, noncombustible, nonabsorbent, and corrosion-resistant. Containers should be generally designed with suitable lifting devices or handles that allow for convenient and safe lifting and handling, while preventing the collector from coming into direct contact with the content. All food waste should be stored in tight-fitting, covered containers that are nonabsorbent, leak-proof, durable, easily cleaned, and designed for safe handling. Receptacles, dumpsters, and compactors used by dining establishments should be cleaned according to the guidelines in Technical Bulletin, Medical (TB MED) 530.

3-6. A collection point manager should be appointed to ensure the maintenance and effectiveness of collection points. The duties of a collection point manager and the procedures for establishing and operating collection points should be captured in a unit SOP to standardize the requirements and to facilitate the training of new personnel.

3-7. A key task for waste management planners is determining the number, location, and dispersion of collection points, based on METT-TC, while managing throughput to ensure that the capacity of collection assets is never exceeded. Waste management planners must devise collection methods that optimize efficiency and effectiveness, without risking personnel safety and mission readiness due to the wear and tear on vehicles and equipment and while minimizing health hazards and preserving the environment. As an operation progresses and base camps become more developed, waste management planners continue to refine their plans for waste collection to improve efficiency and effectiveness and to reduce costs and save time.

3-8. The primary considerations in determining the placement of collection points are health, safety, and environmental factors. In addition to these considerations, collection points must also be conveniently located and secure from scavengers. Waste collection points should be located at least 100 feet from dining facilities. Security considerations and prevailing wind direction may also affect placement.

3-9. The schedule for removing waste from the collection points is based on the amount of waste that is generated and ensures that the capacity of collection points is never exceeded. Initially, plans should be made to ensure that waste is removed at least every 2 days and daily from food service facilities.

3-10. Waste management planners implement controls to ensure that segregated waste remains segregated. This segregation ensures the integrity and viability of recyclables and minimizes the amount of individual waste handling. These controls must also be conveyed in contracts if contractors are used to perform collection tasks. Waste collection contracts should specify a pickup schedule and contain the necessary provisions to allow for adjustments if the base camp population fluctuates. The COR and local quality assurance evaluators are responsible to the contracting officer for ensuring contract compliance.

3-11. Units on the move may be required to temporarily store and transport nonhazardous SW until collection can occur; or waste may be collected from subordinate units, transported to a consolidation area, and temporarily stored until further instructions are provided. Plans for temporary storage must ensure that the waste does not—

- Create a health or environmental hazard.
- Create a fire hazard.
- Attract or harbor insects and rodents.

- Present a litter problem, which can be compounded by strong winds.

TRANSPORTATION

3-12. Nonhazardous SW is normally hauled from collection points to a recovery or disposal site in collection vehicles. This function can be performed by military personnel and/or local or nonlocal contractors. SW should be collected in a vehicle dedicated for that purpose. Vehicles designated to perform trash collection should have a low gate for easy access and a suitable cover or other means to prevent trash from blowing off during movement. Vehicles used to transport trash must be cleaned before use for other missions. Vehicles subsequently used for transporting food items must be cleaned and disinfected with a chlorine solution (use 6.4 ounces of bleach per 1 gallon of water to achieve 200 parts per million).

3-13. Transportation routes are planned and coordinated in the same manner as any other tactical movement, with consideration for protection and safety, based on the threat, road conditions, and roadway restrictions (to include the presence of local civilian traffic). Waste management planners work closely with logistic and transportation planners to ensure that units performing transportation tasks are provided with clear instructions on the special handling, storage, and transportation requirements and safety measures for the various waste streams. Those requirements are captured in SOPs and referenced in operation plans and orders. The following are some general considerations that waste management planners use when developing the waste transportation plan:

- Avoid repetitively uploading and offloading (double-handling) waste.
- Maintain segregation that has been established throughout the transportation phase.
- Include the estimated quantities of waste (in tons and/or cubic yards) requiring movement within transportation tasks to subordinate units to facilitate their planning and allocation of resources.
- Minimize routes through billeting areas, and perform dust abatement as necessary.

3-14. During execution, waste management planners monitor and assess the transportation plan and make adjustments as necessary to improve efficiency and effectiveness while continuously managing risks. Feedback and lessons learned should be solicited from subordinate units to gain insight on how to improve transportation tasks.

RECOVERY

3-15. As discussed in chapter 1, recovery aims to divert waste material from the waste stream to reduce the overall amount of waste requiring disposal. In managing nonhazardous SW, waste management planners are primarily focused on material recovery through recycling, biological recovery through composting or feeding of edible wastes to livestock when allowed, and reusing materials. Energy recovery or waste-to-fuel efforts (such as fuel blending) are also an option and are discussed in appendix F.

3-16. A key task involved in recovery is segregation. Segregation includes all of the necessary actions for separating recoverable materials into component streams for recycling, composting, or reuse and for maintaining that separation throughout the waste management process. Source segregation is the preferred method for achieving this separation. Source segregation occurs at or near the point of generation or at a collection point, and it is best achieved by providing individual, labeled containers for each type of waste. Segregation is a functional area responsibility (logistical, dining facility, construction, or maintenance) and an individual responsibility. It must be made as easy as possible with directions that can be easily understood and followed. Segregation requirements need to be reinforced at all levels.

3-17. For units on the move or engaged in combat, source segregation may not be practical. In those instances, separation may have to occur after collection through the use of a consolidated segregation yard or material recovery facility where assigned personnel manually segregate waste.

Recycling

3-18. Recycling is the process by which materials otherwise destined for disposal are collected, reprocessed, and eventually reused. As discussed in chapter 1, recycling programs may not be available at the onset of operations. Waste management planners must determine if it is feasible or practical to separate

and store recyclable materials until the means for recycling, through contracting or a local recycling market, is established.

3-19. Waste management planners establish the necessary procedures and controls within plans and orders to ensure that waste being recycled is not contaminated with hazardous substances, does not need to be turned into the Defense Reutilization and Marketing Office, or does not require demilitarization. All U.S. identification markings should be removed through painting or sanding before turning waste over to non-U.S. entities.

3-20. The responsibility for collecting and storing recyclable material normally resides with the activity generating the waste (for example, the unit motor pool or supply area). Some of the primary unit activities or functions and the common types of recyclable materials they can generate include—

- **Morale, welfare, and recreation sites.** Aluminum cans, plastic drink bottles, and plastic food containers.
- **Kitchen areas.** Aluminum cans, plastic drink bottles, plastic food containers, cardboard, steel cans, wooden pallets, and food waste. In some countries, edible food waste can be used for feeding livestock.
- **Supply areas.** Cardboard shipping, packing materials, and shipping pallets.
- **Maintenance areas.** Aluminum cans, plastic drink bottles, cardboard package materials, scrap metal, used oil and antifreeze, wood pallets, and recoverable maintenance parts.
- **Construction sites.** Leftover construction material, construction debris, packing materials, aluminum cans, and plastic drink bottles.

Composting

3-21. Depending on the duration of the mission, waste management planners should consider composting as a means to reduce the total amount of organic SW materials requiring disposal. Composting is a biological process for converting decomposable organic materials into a useable product. Some examples of compostable organic materials found within a base camp include sewage sludge, food waste that is not contaminated with grease and oil, wood debris, cardboard, and paper. The compost produced from these materials can be used as an agricultural soil amendment (adding material to soil to improve its properties) in erosion control projects, land farming bulking, and a nutrient source. Compost bioremediation can also be used to restore contaminated soils (soil remediation) and degrade volatile organic compounds. USAPHC has the expertise and ability to help units establish an efficient composting program.

3-22. In determining the viability of a base or unit composting program, waste management planners begin by analyzing the SW stream to determine what portions are compostable, where those materials are generated, and the unit's ability (time and resources) to efficiently separate, collect, and transport compostable material to a compost site. A base camp population of 2,500 can produce approximately 5,500 cubic meters or at least 1,500 tons of compostable SW (including sewage sludge) per year. Planners must determine if space is available and suitable for establishing a compost site, determine who will use the finished compost, and compare the estimated compost generation with the demand. They must then evaluate and compare the advantages and disadvantages for establishing, maintaining, and closing a compost site against burning and burial options.

3-23. The composting site can be as simple as a concrete base with built in drainage under a pole barn or a more complex engineered site. An engineered site should include 6 inches of compacted, well-graded gravel; over 12 inches of compacted, engineered base; over a compacted base that's composed of low-permeable native soil or impermeable geotextile. If soil permeability is unknown, soil percolation tests must be conducted. The maximum site slope must be 3 percent. Stormwater runoff from the site to a retention pond must be provided. If petroleum sheen is observed in the retention pond, the runoff may need to be collected and treated. All-weather access roads and electrical power service must be provided. Hard-wear surface pads may be required for some technologies, such as container vessels.

3-24. The major steps in the compost process are ingredient preparation, active composting, curing, screening, and application. Controls must be implemented to screen the SW being introduced into the composting system to remove hazmat and materials that cannot be composted and to prevent significant

odor issues, while ensuring the quality of the finished compost product. A composting plan must address the following areas:

- Roles and responsibilities for personnel that will manage the compost program.
- Flow of material into and out of the compost site.
- Guidelines for developing quality compost, to include air and moisture management.
- Resources (personnel and equipment) and procedures for establishing, maintaining, and closing the compost site.
- Considerations for safety, health, and environment, to include odor, vector, leachate, and stormwater management.

3-25. Determining the method to use will depend on the types of material to compost, availability of land space in the unit area, climate, and availability of funding and special equipment and/or contracted support. The following paragraphs briefly describe the three primary methods for composting and the advantages and disadvantages and system requirements for each method. More information on composting can be found at <http://www.epa.gov/waste/conserve/rrr/composting/index.htm>.

Aerated Static Pile

3-26. This controlled process (easiest and least equipment and labor intensive method) uses pumped air and a semipermeable membrane cover to promote accelerated decomposition of the heap ingredients. Some waste material may require an additional maturation phase (in addition to the standard intensive and curing phases). The typical total processing time for the aerated membrane process is 6 to 9 weeks. After the initial setup, the only time the heap is handled is when the entire heap is moved from the intensive phase to the curing phase. The membrane cover provides a physical barrier from vectors and precipitation. It provides a vapor layer that reduces the emission of odors and pathogen compounds in exhaust air. The membrane also provides even air distribution throughout the heap. The system includes a computer-controlled instrumentation component that regulates the blower operation using feedback from temperature and oxygen probes inserted inside the heap. Advantages of the aerated membrane method include simplicity, shorter processing times, automated operation, less potential for failure, protection from vectors and precipitation, odor reduction, and relatively long equipment life. Disadvantages include higher up-front costs; cost for aeration energy; and costs for the membrane cover, blower, and associated equipment. The major requirements for this system are as follows:

- Polyvinyl chloride aeration pipes, blowers, probes, a computer system, a membrane cover, and a container or fixed winding devices for the cover.
- A heavy-duty chipper or tub grinder. Most of the wood will be dry pallets and excess building materials.
- A star or trommel screen.
- A bucket loader, 2.5- to 5-cubic-yard (preferably with an Allu screener-crusher attachment).
- A manure spreader (optional).
- A space of approximately 5,000 square meters per 1,500 annual tons or 5,500 annual cubic meters of annual organic-waste generation.

Windrow Method

3-27. In this method (least effective for base camps), compostable material is formed into covered or uncovered rows or long piles (windrows) that are approximately 1 meter high. Turned windrows rely on mixing and aeration performed by mechanically turning the windrow. Passively aerated windrows use a perforated piping system (similar to that used for septic system leach fields) to supply air, which eliminates the need for turning. Finished compost can be made from 3 months to 2 years, depending on the type of waste, temperatures, and turning frequency. Preshredding the compostable material can accelerate composting and may be necessary if a large amount of waste needs to be processed on a small site. The advantage of this process is its lower up-front costs. Disadvantages include high maintenance and labor, high energy demand (tractor fuel), susceptibility to weather, vulnerability to vector and odor problems, and relatively short equipment life because of the corrosive environment. The open windrow process tends to be operationally complex, requiring careful management of the heaps. The open windrow technology

differs from the aerated membrane method in that its efficiency is managed by turning, based on manual temperature and oxygen readings taken daily. The major requirements for the windrow method of composting are as follows:

- A tractor with creeper gear and power take-off for windrow turner.
- Thermometers and oxygen probes.
- A windrow turner that fits the tractor or an all in one self-powered windrow turner.
- A water tank that fits the tractor.
- A heavy-duty chipper. Most of the wood will be dry pallets and excess building materials generated at the camp. A tub grinder is not recommended.)
- A manure spreader.
- A star or trommel screen.
- A 2.5- to 5-cubic-yard bucket loader (preferably with an ALLU® screener-crusher attachment).
- A space of approximately 15,000 square meters per 1,500 annual tons or 5,500 annual cubic meters of annual organic-waste generation.

In-Vessel System

3-28. These commercially available systems take raw waste and place it in a completely enclosed system that has built-in aeration and mechanical mixing equipment. This offers protection from severe weather and better odor control than other methods; however, the system is expensive to build and operate. An additional 3- to 8-week curing cycle (using open windrows) is required after the material is removed from the container, for a total processing time of approximately 11 weeks. This system may be useful for base camps with small volumes of compostable material where a centralized task force composting facility is not available or readily accessible. The advantages to this process include shorter reaction times, protection from vectors, the mitigation of environmental influences, transportability, and reusability. Disadvantages include potential odor issues; costs for aeration energy; the potential for vector and precipitation problems during the curing phase; and the need for manufactured vessels, blowers, and associated equipment. The major requirements for this system are as follows:

- Aerated vessels. The number required is based on the amount of material produced daily. For example, a camp producing 5 cubic meters of compostable material will use about 5 cubic meters of bulking agent a day. Therefore, a 3- week, in-vessel composting cycle will require six 40-cubic meter containers.
- A heavy-duty truck or crane that can dump the vessel at the curing site.
- Instrumentation.
- A heavy-duty chipper. Most of the wood will be dry pallets and excess building materials. A tub grinder is not recommended.
- A star or trommel screen.
- A bucket loader, 2.5- to 5-cubic yard (preferably with an ALLU screener-crusher attachment).
- A manure spreader (optional).
- A space of approximately 5,000 square meters per 1,500 annual tons or 5,500 annual cubic meters of annual organic-waste generation.

Reducing and Removing

3-29. Source reduction or removal refers to any change in the design, manufacture, purchase, or use of materials or products (including packaging) to reduce or remove their amount or toxicity before they become SW. Eliminating products that use glass containers removes this very difficult to dispose of component from the SW stream. Efforts should be made to reduce the amount of SW generated through proper supply ordering, to include the procurement of products that generate less waste. Reducing the amount of packaging waste generated by ordering in bulk or ordering products from companies that reduce packaging material is an example. Also, only ordering a supply of products that can be reasonably used in a given time period, especially when ordering hazmat, is another example. The source reduction of hazmat will create the added benefit of reducing the amount of HW that will be generated. This reduction is to be achieved through product substitution, recycling, inventory control, and developing new industrial

processes that use less hazmat, such as bead blasting rather than solvents to remove paint (see *Environmental Considerations*).

Reusing

3-30. Reusing materials is the easiest way to reduce the amount of waste requiring disposal. Units can facilitate reuse by declaring which materials are suitable for reuse, based on established supply guidelines and disposition instructions for excess property, and providing a consolidated storage area for those materials conveniently accessible to units. Some of common nonhazardous items within units that can be reused include, but are not limited to—

- Leftover construction materials, such as lumber, concrete blocks, bricks, steel rebar, and nails.
- Wooden pallets.
- Furniture.
- Excess office supplies.
- Packaging and shipping materials
- Oil and lubricants
- Off-specification fuels can be used as accelerants

3-31. Repairing and/or refurbishing used items instead of ordering new replacement items will reduce generated waste. This can be achieved by establishing a repair and utilities program within the unit or establishing that capability with the logistics civilian augmentation program supporting contractor.

DISPOSAL

3-32. The two primary disposal methods for nonhazardous SW by deployed forces are burial and burning. In general, the hierarchy for nonhazardous SW disposal is, in preferred order—

- Burial in a properly designed and approved landfill.
- Burial in open pits or trenches when a landfill does not exist, an existing landfill is too far away, or units are unable to transport waste to an existing landfill due to threat conditions or mission requirements.
- Burning in SW incinerators.
- Burning in open-air burn pits according to DOD guidance.

Note. Items must be sorted first. Aboveground waste piles or open dumps are not allowed. All burial or burning operations will be conducted according to appropriate HN environmental laws and the theater SOP and with the concurrence of the local government.

3-33. Waste management planners must consider METT-TC variables and health and environmental factors for each situation when determining how best to dispose of nonhazardous SW, to include the following:

- Existing occupational health conditions stated in the OEHSA.
- Environmental impacts and existing conditions stated in the EBS.
- Risks to groundwater, surface water, and sources of potable water.
- Dust control and respiratory health hazards.
- Noise and litter control.
- Fire safety.
- Vector and bird control.
- Gas generation and migration of dissolved constituents (sanitary landfills).
- Throughput capacity of the disposal method to meet estimated generation rates.
- Risks to transporting waste to existing landfills, based on the threat and road conditions.

3-34. Plans should be integrated with the theater supply chain management to capitalize on the removal of recoverable or recyclable material. Site selection criteria should include the ability to expand the scope of

burial or burning to meet emergency needs (such as enemy interdiction of ground lines of communication that prevents contracted SW haulers from removing camp SW to a municipal or commercial landfill). Open-burning site plans should include sufficient flexibility to allow shut down for maintenance or ash removal (this may require more than one burn pit in an AO due to the size of the base camp) or replacement of an operational burn pit with an incinerator (when it becomes available). During execution, waste management planners monitor the means for disposal and anticipate when the maximum capacity and/or established health and environmental thresholds will be exceeded, based on increased demands due to unit task organization changes or base camp expansion. Waste management planners establish triggers or change indicators that provide ample lead time for planning, approving, acquiring, and implementing additional disposal means. As part of future planning, disposal methods should be upgraded according to the applicable base camps construction standards established for the theater of operations (such as those contained in Central Command's Regulation 415-1), which will tend to become more enduring as the theater matures. Waste management planners work closely with base camp managers and planners to incorporate waste management initiatives within base camp master planning.

Waste Burial

3-35. The two options for the burial of nonhazardous SW are landfills and burial pits or trenches. Preexisting landfills should be used when possible. If an adequate landfill does not exist, specialized or general engineer units or contractors will have to be used to design and construct one. The establishment and operation of a landfill is a resource-intensive, long-term solution to contingency SW disposal requirements.

Landfills

3-36. A sanitary landfill is an engineered disposal method in which SW is spread, compacted, and covered with soil daily. When properly designed, they can accommodate nearly all types of SW, while safeguarding the environment. In considering whether the construction of a landfill is a viable option for the operational area, waste management planners should first seek the expertise available through higher headquarters, supporting units, specialized engineer units, or reachback to USACE and USAPHC. Other considerations include the following:

- Land availability and accessibility, based on existing road networks.
- Land use restrictions, such as the proximity to local populations and airfields. Landfills must be at least 10,000 feet away from airfields to prevent the threat of bird strikes.
- Landfill effects on local populations and future land use.
- Landfill effects on future operations.
- Landfill effects on the environment (gas generation and groundwater).
- Mission duration estimate (to justify the costs and efforts associated with constructing, operating, monitoring, and closing a landfill).
- Adequate availability of cover material. Landfills generally require a waste-to-cover ratio of 4:1.
- Equipment and labor costs for construction, operation, maintenance, monitoring, and remediation upon closure.

3-37. If a landfill is to be constructed, waste management planners perform an initial analysis of the situation to determine the best location for a landfill. In general, landfills can be constructed on virtually any terrain; however, some land features require extensive site improvements and expensive operational techniques. Flat or gently rolling terrain that is not subject to flooding is typically best suited for landfills, though depressions (canyon and ravines) can be more efficient if sufficient cover material will be available and surface waters can be controlled. Man-made features like strip mines, quarries, and open-pit mines can usually be safely and economically reclaimed as landfills. Other important considerations include the following:

- Landfills should be downstream, as far away as possible from water sources. Surface water that infiltrates cover soil leads to rapid decomposition, leachate, and groundwater pollution hazards.
- Landfills cannot be sited within a 100-year flood plain and should not be located in areas with a high water table. There must be adequate clearance, based on soil characteristics and the

effectiveness of liners, between the height of the water table and the lowest point of the landfill to reduce the risk of leachate migration and groundwater contamination.

- Landfills are not suitable for hilltops, highly permeable or porous areas (such as gravel beds), swamps or marshes, natural drainage channels, wildlife sanctuaries, flood plains, land having karst features (such as limestone formations which can lead to the formation of sinkholes and depressions), and steep slopes.
- Soil conditions must be suitable for preventing groundwater pollution, excavating and covering the fill, and providing vehicle access.
- Underground utilities and structures must be avoided.

3-38. Once constructed, landfills must be properly operated and maintained. Guidance on constructing and operating landfills is provided in Unified Facilities Criteria (UFC) 3-240-10A.

3-39. Site closure can be expensive and difficult if it's not included as part of the initial landfill design. Three basic goals need to be achieved:

- Minimize the need for further maintenance at the site.
- Place the landfill in a condition that will minimize future environmental impacts.
- Prepare the site for future use.

Upon closure, the date the landfill was opened and closed and accurate map coordinates are reported to higher headquarters. This information will be useful in settling potential liability claims and supporting environmental remediation efforts.

3-40. Depending on the region, local waste burial pits or excavation sites typically lack liners, daily cover, run-off controls, or other modern techniques for managing sanitary landfills. These disposal site conditions present other environmental effects, such as leachate, vector attraction (rodents, flies, mosquitoes, and other organisms capable of transporting infectious agents), and gas generation (such as methane). Therefore, it is important to reduce the overall volume and toxicity of the SW being disposed there.

3-41. If existing landfills are available, waste management planners will need to determine how best to access them. They must consider existing conditions of access roads, threat conditions, and the need to establish transfer stations. Transfer stations are intermediate locations for gathering waste and may be needed when—

- The distance from collection points to disposal sites is too far away to be economically feasible for direct haul.
- Movement to the disposal site is restricted or hazardous and must be limited.
- Access to the base camp by local contractors is restricted and must be limited to "on call" collection.
- Small capacity collection trucks are used.

3-42. Transfer stations can also be used on base camps to facilitate the collection by contractors. Transfer stations should be located near contractor access gates (or search areas), with barriers in place to prevent access to the rest of the base camp for security reasons.

Hasty Burial Operations

3-43. Hasty burial operations are conducted by tactical maneuver units during an operational pause in close combat. Its employment is driven by the unit's need to safely dispose of its accumulated SW to maintain operational security, combat effectiveness, and tactical agility. Very rapidly, a field expedient disposal site is selected by the officer or noncommissioned officer in charge and excavated using available or organic resources. After SW is deposited, the site is capped with soil, and the unit reports its location through the chain of command. Even though rapidly executed by a mobile unit, hasty burial operations must still adhere to published theater SW disposal guidelines, especially regarding the recording and reporting of the location.

Tactical Waste Burial

3-44. When units are on the move or stationary in a position for less than 1 week or when established landfills are unavailable, nonhazardous SW should be buried in pits or trenches.

- **Pits.** Pits are preferred for overnight halts. A pit 4 feet square and 4 feet deep is suitable for 1 day for a unit of 100 individuals (see figure 3-1). The pit is filled to no more than 1 foot from the top and then covered, compacted, and mounded with 1 foot of earth. For stays greater than 2 days, a continuous trench is preferable since it can accommodate a larger amount of garbage and allows for a daily coverage of earth as the trench is extended.
- **Trenches.** The trench is first dug about 2 feet wide, 4 feet deep, and long enough to accommodate the garbage for the first day. As in the pit method, the trench is filled to no more than 1 foot from the top and then covered, compacted, and mounded with 1 foot of earth. The trench is extended as required, and the excavated dirt is used to cover and mound the garbage already deposited. This procedure is repeated daily or as often as SW is dumped.

3-45. At a minimum, waste burial sites are located at least 100 meters from any natural water source used for cooking or drinking, such as a stream, lake, or well. The waste burial site will also be at least 30 meters from kitchens and eating areas to minimize problems with insects, rodents, and odor.

3-46. When closing a waste burial site, place signage at the site that indicates the type of pit or trench, the date it was closed, and the unit designation if the situation allows. An 8-digit grid coordinate is recorded for each waste burial site and reported to higher headquarters. This information will be helpful in resolving disputes with landowners or HN governments and in performing any future remediation that may be required.

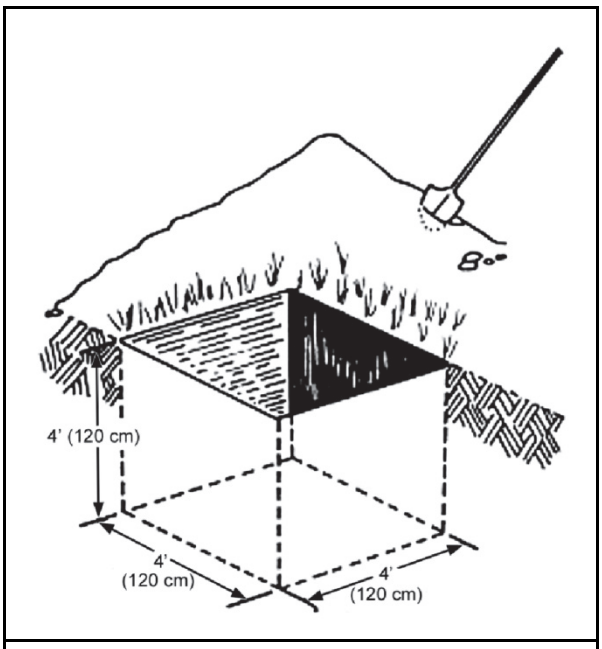

Legend:
cm centimeter(s)

Figure 3-1. Garbage burial pit

Burning

3-47. When local or nonlocal contractor support is unavailable and waste burial is not possible, the preferred method of nonhazardous SW disposal is thermal destruction in incinerators or burn pits. Burn pits will only be used according to DOD guidance. A distinction must be made between "open burning" and disposing of waste with the use of an incinerator:

- ***Open burning*** **is the burning of any substance in such a manner that products of combustion are emitted directly into the surrounding outside air without passing through an adequate stack, duct, or chimney.**
- **An *incinerator* is an enclosed device that uses controlled flame combustion for the process of burning waste.** An incinerator may also include a heat recovery system for hot water or steam generation.

3-48. Burning SW produces pollutants, such as dioxins, particulate matter, polycyclic aromatic hydrocarbons, volatile organic compounds, carbon monoxide, hexachlorobenzene, and ash. Highly toxic dioxins, produced in small amounts in most burning processes, can be produced in elevated levels with the increased combustion of certain plastic or organic waste materials (such as polyvinyl chloride pipe or discarded bottles) and if the combustion is not performed at a high temperature. Inefficient combustion of medical or latrine waste can create disease-laden emissions. The incineration of medical waste is discussed in chapter 6.

3-49. There are several controls that can reduce the potential health and environmental impacts associated with burning:

- Establish burn pits and incinerator sites far away (at least 450 feet for burn pits) from and downwind of inhabited areas, such as work and billeting areas. If possible, attempt to site all combustion operations away from potential future expansion locations for the base camp.
- Ensure that anyone operating and maintaining open-burning operations and incinerators comply with existing environmental guidance and manufacturer's instructions. This may require obtaining manufacturer-sponsored training as part of an incinerator procurement package. Purchase orders or contracts should stipulate that liability will be retained by the manufacturer (or contractor) for getting the incinerator into compliance with allowable emission standards (if applicable).
- Divert dining facility waste to a compost facility or to the landfill. Wet waste in the burn pit or incinerator will reduce the efficiency of combustion. Since incinerators will not handle wet garbage well, it is necessary to separate the solid from the liquid portions of the garbage. This is done by straining the garbage with a coarse strainer, such as an old bucket, salvaged can, or oil drum with holes punched in the bottom. The solids remaining in the strainer are incinerated, and the liquids are poured through a grease trap (see chapter 4) into a soakage pit.
- Ensure that no hazmat, HW, special waste, lithium batteries, or heavy metals are incinerated, which could result in explosions or toxic gases. See chapter 5 for more information on HW and special waste and chapter 6 for medical waste.
- Increase combustion temperatures to destroy biohazards, decompose dioxins and other toxic compounds, and loft the plume higher for better dilution.
- Prevent low heat or smoldering fires, which tend to emit toxic compounds and fail to loft the plume high enough for atmospheric dilution, by providing ample ventilation and carefully adding an appropriate amount of fuel.
- Ensure that personnel supporting the burn operation wear the appropriate PPE for respiratory protection, biohazard shielding, heat protection, and fire hazard if handling supplemental fuel.
- Analyze the meteorological conditions and only conduct burning when the conditions ensure the protection of downwind populations and promote plume lofting and mixing.
- Seek advice from experts, such as those within USAPHC who can assist units in monitoring burning operations and assessing health and environmental impacts.
- Establish emergency response procedures and an emergency response team.
- Emplace security fencing or berms to assist in limiting access to burn operations.
- Provide trained operators to ensure that prohibited waste is not burned and to prevent unrestricted burning.
- Establish burn times to optimize effective burning and to take weather conditions into consideration.
- Ensure that burning operations are appropriately maintained to control the burn.

- Disseminate base camp SOPs to senior commanders of tenant organizations before burning operations begin. The enforcement of the SOP by leaders within the chain of command will increase individual awareness and confidence in the process, eliminate the unnecessary use of small-unit burn barrels, discourage unauthorized midnight garbage dumping, and increase the habitability and safety of the camp.
- Maintain quality control to ensure personnel safety and accurate recordkeeping. Resources required to perform open burning may transition from unit manpower and equipment to commercial or contracted over the course of the base camp life cycle.

3-50. Subject matter expertise (available through higher headquarters, supporting specialized engineer units, FFE, or reachback) should be sought before constructing or using any incineration device. Open burning, to include burn barrels which are described below, should only be used in emergency situations when waste burial is not possible and only until approved incinerators can be obtained. The improper use of incinerators or burning methods poses significant health hazards. See appendix F for information regarding emerging technology.

3-51. Open burning is usually conducted in a dug-out area, such as a pit, but may occur above ground. Open burning can be harmful to human health and the environment and should only be used until more suitable disposal applications are established, such as the procurement and installation of a SW incinerator. There are several different ways that open burning operations can be conducted, but strict adherence to DOD guidance and theater environment SOPs must occur.

3-52. Once established, an open-burning site maintains fixed operating hours, usually during daylight hours only, and may operate seven days per week. A designated person or crew opens the site for the acceptance of materials for incineration. The contents of each tipping vehicle, or garbage bag for burn barrels, are inspected to ensure that prohibited items are not intermixed. This also supports the collection of data for recordkeeping purposes. Consumable and sustainable supplies (fuel, fire extinguishers, communications gear, hand tools, PPE) are maintained at the site to support operations. Before daily burning begins, the base camp fire service is alerted to the activities. As it becomes necessary, routine site maintenance (removal of ash and burn residue) and environmental quality monitoring is performed. Depending on the scope of maintenance or environmental monitoring, engineer equipment and industrial or occupational health technical support may be required.

Hasty Burning Operations

3-53. Hasty burning operations may be conducted by tactical maneuver units during an operational pause in close combat. The decision to employ the hasty burn method is driven by two factors:

- The units need to safely dispose of accumulated SW to maintain operational security, combat effectiveness, or tactical agility.
- Hasty burial is not a viable option.

The officer or noncommissioned officer in charge selects a site for the hasty burning. It may be a natural depression in the terrain or a rapidly excavated depression to use as a burn pit. After SW is deposited, a fuel source is applied and safely ignited. Once the contents have been eliminated, the site is capped with soil and the location is reported through the chain of command. Hasty burning operations are similar to hasty burial operations in that they must adhere to published theater SW disposal guidelines.

Burn Pit

3-54. Open-pit burning is the most convenient method of burning, but it is also the least preferred method because of the inherent health, safety, and environmental hazards. A burn pit is a controlled open area where SW is collected and reduced in volume and putrescence by thermal decomposition. Burn pits can be shallow excavations or surface features with berms. Controls must be implemented to mitigate the health and environmental hazards associated with burn pits, and waste management planners must develop a plan to transition to an incinerator as soon as practical as the base camp matures and/or the population increases. Burn pit usage will follow DOD guidance. Alternative waste management practices (such as source reduction, recycling, incinerators, and landfills) are alternatives for managing DOD wartime waste streams, decreasing volume and potential for toxicity, and reducing the potential health impacts of burn pits.

3-55. Materials that create unreasonable amounts of smoke, fumes, or hazardous air pollutants should never be burned in a burn pit, burn box, or incinerator. These include HW; petroleum, oils, and lubricants (POL) products (other than the waste fuel that is used to start a fire); rubber; tar paper; asphalt shingles; tires; treated wood; batteries of any type; unexploded ordnance; aerosol cans; compressed gas cylinders; plastic (except insignificant amounts); paint; paint thinner and strippers; pesticides; pesticide containers; asbestos; appliances and electrical equipment; and electrical wires.

3-56. Noncombustible materials (such as metal) should be separated and stockpiled for recycling or appropriately landfilled as a last resort.

3-57. SW should be burned completely to ash. When burn pits are not actively burning, they should be covered with 4 to 6 inches of soil to prevent exposure to vectors. Upon closure, the date the burn pit was opened and closed and an accurate map with grid coordinates is reported to higher headquarters. This information will be useful in supporting environmental remediation efforts, as needed. Before-photographs should have been included as part of an EBS or environmental conditions report (ECR), and closure photographs are required as part of the environmental site closure report.

Burn Barrel

3-58. A burn barrel (see figure 3-2) will effectively handle SW produced by a company-size or smaller unit. This is an excellent mechanism for dry trash, but wet material disrupts proper draft and does not burn easily. A stack is made from a 55-gallon drum with both ends cut out or with one end cut out and the other end liberally punched with holes to admit draft air. Holes are punched through the sides of the drum and steel rods are inserted. The steel rods create a grate. The drum is set up on rocks, bricks, or other nonflammable material. A fire is built under the drum and the waste is added, one shovelful at a time, on top of the grate.

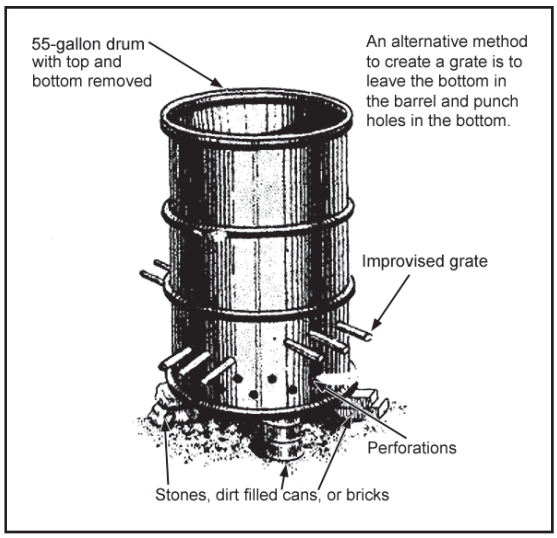

Figure 3-2. Burn barrel

Inclined-Plane Burner

3-59. An inclined-plane burner (with vapor burner) achieves effective combustion, is minimally affected by wind or rain, and will dispose of the SW for an entire battalion-size unit. However, building the burner requires time and skill.

3-60. As shown in figure 3-3, the inclined-plane burner is constructed by inserting a sheet of metal through telescoped oil drums that have had both ends removed. The metal plane should extend approximately 2 feet beyond the upper end of the telescoped barrels to serve as a loading or stoking platform. A grate is positioned at the lower end of the plane, and a wood or fuel oil fire is built under the grate. After the burner becomes hot, drained garbage is placed on the stoking platform. As the garbage dries, it is pushed down the incline in small amounts to burn. Final combustion takes place on the grate.

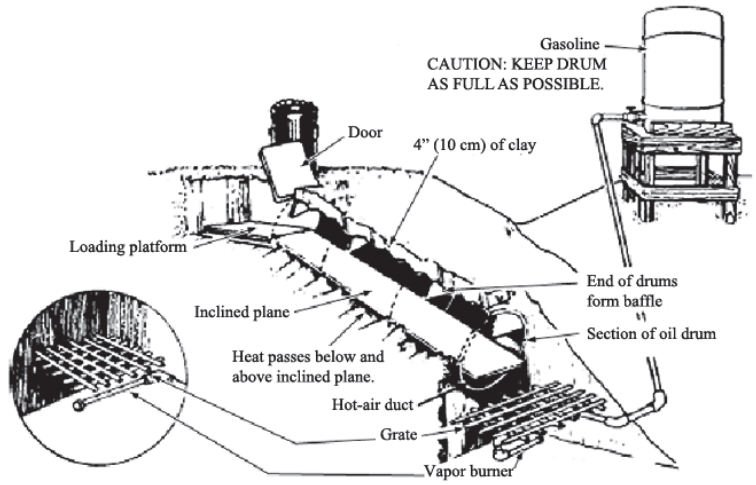

Legend:
cm centimeter(s)

Figure 3-3. Inclined-plane burner

3-61. Because the burn barrel and inclined plane burner are considered open burning, planners must ensure that open burning is permitted within the operational area, based on guidance established for the theater of operations. Other considerations include the following:

- Operate from 3 hours after sunrise to 3 hours before sunset to ensure good smoke dispersion.
- Use approximately 1 gallon of fuel per each cubic meter of waste.
- Locate downwind of work and billeting areas.
- Ensure that personnel are trained and available to operate and maintain burners.
- Ensure that the area around the burners is free of refuse.
- Manage collection and delivery schedules of refuse to the burner. Manage the throughput so that it is neither overloaded nor operating at fractional capacity.
- Ensure that time is allowed for cleaning and trimming the fire before closing.
- Allow 0.5 to 0.75 man-hours per each ton of refuse processed, excluding residue removal and major repairs.

Incinerators

3-62. An incinerator is designed and operated in a manner that minimizes the production of nonstack, fugitive emissions. An incinerator has enclosed combustion chambers that provide a more complete burn and the ability to reduce large volumes of waste. An incinerator must be able to provide controlled burning conditions that ensure the proper mixture of air, temperature, fuel, and the time to allow thorough destruction of organic material. SW incinerators will not be used to dispose of HW or medical waste. Incinerators specifically designed to handle HW and medical waste will be used and will have specific emissions standards required for those waste streams.

3-63. There are challenges that will need to be addressed regarding incinerators:

- An incinerator is expensive to purchase and install.
- Transportation to the site of installation will need to be considered and may require contracted transportation.
- The land required to install an incinerator is not always available.
- The life expectancy and size of the base camp may fluctuate. Smaller incinerators and portability can provide commanders with the flexibility to relocate as base camps close or as generated waste capacity fluctuates.

- An incinerator will need to be inspected, set up, and operated by trained personnel.
- A feeding system is essential to the proper flow of waste through an incinerator and should not be overlooked during the purchasing process.

3-64. Even with the proper design features, trained operators are essential for the safe and proper operation of an incinerator. Operators should understand the principles of good combustion and be familiar with the equipment. This may require obtaining manufacturer-sponsored training as part of the procurement package. Careful attention to waste segregation, fuel blending ratios, and waste burn rates are essential to an effective incineration program. Routine maintenance, inspection, and instrument calibration should be conducted and recorded. Safety and emergency response plans that address likely failure scenarios must be in place, documented, and shared with mutual aid activities.

3-65. Residual materials (noncombustible SW and ash) must be removed from the incinerator and transported for disposal. Residual materials should be tested before being disposed to ensure that they are not a HW. Contact PVNTMED for assistance with sampling for waste characterization.

3-66. Incinerator ash will generally be buried for disposal if found to be nonhazardous. Landfills can facilitate the use of incinerators by providing an alternative disposal option for certain items that hinder efficient combustion and provide a location for the disposal of ash. The disposal of dining facility waste in landfills or by composting removes this waste from burn pits and incinerators, which will ultimately improve combustion. Depending on the region, local waste burial pits or excavation sites typically lack liners, daily cover, run-off controls, or other modern techniques for managing sanitary landfills. These disposal site conditions can present other environmental impacts, such as a lack of leachate collection system. Therefore, it is imperative to ensure that ash is sampled and characterized before disposal.

Air Curtain Destructors

3-67. The air curtain introduces a controlled velocity of air across the upper portion of the combustion chamber in which waste is loaded. The curtain of air created in the process traps unburned particles beneath it in the high temperature zone where temperatures can reach 1,800 F. Increased combustion time and turbulence of the air curtain burning results in a reburn and more complete combustion of the loaded waste. The escaping particles are reduced to near base elements. Burn boxes are one type of incinerator device that creates an air curtain to help reduce emissions and accelerate the combustion. They are designed for the destruction of wood waste materials only. They do not contain a dual combustion chamber or a stack for dispersing emissions and are not designed for SW (food waste or plastic). If used to combust wet waste or plastic, resulting air emissions could exceed the long-term exposure guidelines for coarse particles.

MANAGEMENT PLAN

3-68. Waste management planners apply the waste management fundamentals described in chapter 1 and the 6-step process introduced in chapter 2 to develop a nonhazardous SW management plan.

STEP 1. ANALYZE THE SITUATION

3-69. During mission analysis, waste management planners attempt to better understand how, where, and how much nonhazardous SW will be generated by the unit and what the challenges and opportunities will be in disposing of it, based on the current situation. As discussed in chapter 2, waste management planners use the METT-TC variables to frame their assessment of the waste situation. Table 3-1, page 3-17, shows METT-TC considerations that are focused on nonhazardous SW.

3-70. As COAs and associated concepts of the operation are developed during step 3 of the MDMP, waste management planners further their analysis, based on the array of forces and the likely areas where waste will be generated. This includes sustainment areas (supply, maintenance, and food services) and other areas where supplies and materials are unpackaged and placed into unit configurations, which tend to generate large amounts of nonhazardous SW. Waste management planners also focus on anticipated situations where units will become stationary for more than 72 hours and are unable to backhaul their generated waste to existing waste-handling facilities or are unable to properly bury or burn the waste.

STEP 2. DEVELOP PRELIMINARY WASTE ESTIMATES

3-71. Waste management planners determine the unit's preliminary estimates of generated nonhazardous SW, based on the—

- Size, functions, and activities of units, based on the task organization.
- Types of materials within unit supply inventories and basic loads.
- Materials identified as recoverable or recyclable.
- Types of materials that will likely be consumed by the unit, based on the current situation (for example, whether the unit is in an established base camp or on the move).

3-72. Based on these considerations, waste management planners use the generation rates listed in table 3-2, page 3-18, as a baseline to develop a tailored, nonhazardous SW generation rate for each subordinate unit (one level down) that accounts for the variations in waste generation rates as the theater of operations and base camps mature. For units on the move or not situated in a base camp, planners use a generation rate of 4 pounds per person, per day, as a general rule of thumb. For units in a base camp, waste management planners must determine a generation rate, based on the maturity of the base camp and the materials that are being consumed within that base camp, while accounting for any materials that are reused or recycled. For example, if a unit is in a base camp and all the materials shown in table 3-2, page 3-18, are being consumed by the unit and nothing is being reused and recycled, the unit's nonhazardous SW generation rate would be nearly 20 pounds per person, per day. If a unit is in a base camp where plastic bottles are being recycled, then the unit's gross amount of waste will be the same, but the amount that must be disposed of is reduced. The goal is to reduce the amount of waste requiring disposal to nearly zero. As shown in table 3-3, page 3-19, nonhazardous SW generation rates are developed for each subordinate unit (one level down) by multiplying the appropriate nonhazardous SW generation rate by the number of personnel. Waste management planners can apply this rate to determine the unit's nonhazardous SW requirements for each critical friendly event or phase of the operation (if phases are used), based on the anticipated duration in number of days. Hub-like bases will generate higher waste amounts. These bases host a fluctuating number of transient personnel who eat at the dining facility, purchase products, and leave waste packaging behind. Senior level headquarters produce larger amounts of waste (such as furniture, computers, printed products, consumables, and wastewater) due to the nature of their operations.

3-73. As planning progresses and throughout execution, the unit's requirements for each critical event or phase are adjusted to reflect anticipated changes in the duration of events or phases. The unit's generation rate is also adjusted, based on changes in the situation, such as when a unit is no longer on the move or different materials are being consumed or recycled.

Table 3-1. Nonhazardous SW considerations in relation to METT-TC

METT-TC Variables	*Considerations*
Mission	• Ability of subordinate units to temporarily contain their generated SW while on the move and between resupply intervals. • Capacity of support vehicles to back-haul SW during resupply operations. • Types of SW to be generated during operations, based on types, sizes, and functions of units: ▪ Supply areas. ▪ Maintenance areas. ▪ Food service facilities.
Enemy	• Operational security restrictions on burying and burning SW (smoke and flame signatures). • Effects of the threat on the use of local and nonlocal contractors and the ability to transport nonhazardous SW to existing landfills.
Terrain and weather	• Soil composition and its effects on digging and burying. • Location of flood plains, water tables, and surface water that could be affected by burying SW.

	• Weather effects (including prevailing wind direction) on burning and burying SW. • Effects of burying nonhazardous SW on future land use.
Troops and support available	• Specialized engineer units. • Local and nonlocal contractors. • Capacity of subordinate units to bury and burn SW. • USACE and USAPHC support and assistance teams. • Funding and contracting support. • Equipment and materials on hand to facilitate troop construction of field-expedient disposal methods. • Specialized equipment (such as shredders, compactors, and incinerators) to facilitate SW disposal.
Time available	• Time available for planning (level of detail). • Shipping times for equipment and materials. • Time available for construction, allowing for shipping times or estimated arrival dates of troops and equipment.
Civil considerations	• Restrictive areas for burying or burning SW, to include billeting or residential areas, historical or cultural sites, environmentally sensitive areas, and food and water sources. • Materials that are recoverable, reusable, or recyclable. • Proximity of humans in assessing the health risks of burning and burying SW. • Negative impacts to our forces due to enemy propaganda.
Legend:	
METT-TC	mission, enemy, terrain and weather, troops and support available, time available, and civil considerations
SW	solid waste
USACE	U.S. Army Corps of Engineers
USAPHC	U.S. Army Public Health Command

Table 3-2. Nonhazardous SW generation rates

Component	*Rate (pounds/person/day)*
Generation Rate on the Move	
General refuse	1.50
Food waste	2.50
Total solid waste	4.00
Generation Rates in Base Camps	
Plastic bottles	0.50
Other plastic	1.40
Aluminum	0.13
Light metal	0.55
Cardboard	1.50
Paper	2.70
Food waste	1.70
Textiles	0.26
Glass	0.10
Rubber	0.01
Polystyrene	0.06
Scrap wood	3.00
Sewage sludge	1.90
Ashes	2.20
Miscellaneous	2.30
Total solid waste	18.30

Notes.

1. This table should be used for projections only. The information provided above is based on studies conducted at intermediate and sustainable phase base camps.
2. 1,000 pounds = @ 1 cubic yard. This conversion factor is dependent on the amount of waste compaction that is possible with the equipment available. If compaction is not possible, 1,000 pounds will exceed 1 cubic yard.
3. The force provider (550 personnel with 50 operators) will generate approximately 2,500 pounds of SW per day.

Table 3-3. Sample nonhazardous SW requirements work sheet

Subordinate Unit	Immediate							Basic						
	Number of Personnel	Generation Rate (lb/person/day)	Unit Generation Rate (lb/day)	Duration (days)	Nonhazardous SW Generated	Conversion (lb to CY) (1,000 lb = approximately 1 CY)	Required Resources (list resources required to manage the SW generated)	Number of Personnel	Generation Rate (lb/person/day)	Unit Generation Rate (lb/day)	Duration (days)	Nonhazardous SW Requirements	Conversion (lb to CY) (1,000 lb = approximately 1 CY)	Required Resources (list resources required to manage the SW generated)
Battalion 1	700	4.0	2,800	3	8,400	7	Black trash bags, trucks for hauling, shovels, and lime (for burying food waste)	700	18.2	12,740	60	764,400	765	Implement integrated SW management plan, properly constructed burn pit
Company 1	100	4.0	400	3	1,200	2	Black trash bags, trucks for hauling, shovels, and lime (for burying food waste)	100	18.2	1,820	60	109, 200	110	Implement integrated SW management plan, properly constructed burn pit

Notes.

1. This work sheet may be expanded to incorporate all subordinate units and phases of an operation.
2. The conversion factor used for lb of waste to CY is dependent on the amount of waste compaction that is possible with the available equipment. If compaction is not possible, 1,000 lb will exceed 1 CY.
3. The weights listed in the table will be in lb unless otherwise specified.

Legend:

CY	cubic yard(s)
lb	pounds
SW	solid waste

STEP 3. CATEGORIZE WASTE REQUIREMENTS

3-74. As discussed in chapter 2, the waste requirements for each subordinate unit (one level down) are categorized (immediate, basic, expanded, enhanced, and transfer and closure), based on expected duration. The categorized requirements are then developed in the work sheet provided in table 3-3.

STEP 4. EVALUATE WASTE MANAGEMENT CAPABILITIES

3-75. Waste management planners evaluate the waste management capabilities and resources (manpower, equipment, materials, and funding) for each subordinate unit (one level down) according to the proposed task organization for each COA being developed. The results of this evaluation are placed in the work sheet on the line corresponding to each subordinate unit as seen in table 3-3. The evaluation of available capabilities will drive the generation of capability-based solutions in step 5.

STEP 5. GENERATE SOLUTIONS

3-76. Waste management planners first generate options that take advantage of existing waste handling facilities within the HN or within existing base camps established by the United States or other countries. When existing facilities and contractor support are not available, waste management planners generate capability-based solutions to meet the nonhazardous SW requirements. Capability-based solutions are feasible, based on the capabilities that are available in the current task organization, or that will likely be made available, based on augmentation from higher headquarters; in which case, a critical assumption must be made and captured during the planning process. (See ADP 5-0 for more information on making assumptions during planning.) As solutions are generated for each requirement, they are depicted for each critical event or phase as shown in table 3-3 with the corresponding tasks and resources (capabilities) needed to fulfill the requirement.

3-77. Waste management planners must not constrain brainstorming or the generation of options, based solely on existing capabilities. They consider options that leverage emerging commercial technologies and best practices and incorporate those initiatives within future planning, to include base camp master planning.

STEP 6. INTEGRATE WASTE MANAGEMENT TASKS INTO PLANS AND ORDERS

3-78. Once a maneuver COA is selected and approved by the commander, waste management planners finalize the nonhazardous SW plan which supports that COA. Waste management planners coordinate and synchronize the supporting waste management tasks with other staff members and higher headquarters as necessary. The waste management tasks are then incorporated into plans and orders as described in chapter 2. Waste management tasks should be included in logistics rehearsals and backbriefs to ensure that the plans are feasible and supportable by higher headquarters.

BASE CAMP TRANSFER AND CLOSURE

3-79. Proper environmental site closure or turnover is the responsibility of the departing unit. Upon receipt or in anticipation of a notice to close or transfer the base camp, waste management planners develop a closure plan that describes the disposition of SW management sites and the actions necessary to return those areas to their preexisting states or to the required condition for closure or transfer. The environmental site closure survey (ESCS) is the mechanism used to document the final condition of the occupied property and to ensure that units have properly prepared sites for closure or transfer. The permanent closure of an open-burning site involves informing the base camp tenant commanders, securing access to the location, filling in burn pit depressions, and coordinating the transfer of historical records through the theater chain of command. Open-burning site plans must allow the closure to correspond with the phased reduction or elimination of the camp population. It must be completed before the unit is released of its responsibility for the site. The EBS and ECRs completed during occupation of the site will be used as the basis for the ESCS. The unit environmental officer will coordinate through the area environmental office or the environmental officer at higher headquarters for any support needed to conduct the ESCS.

3-80. The site closure plan will include detailed information regarding waste management requirements to properly close or transfer a base camp. It will describe the required actions, tasks, and standards necessary and should be sequenced with the ESCS timeline. The plan complements and supports SOPs, orders, and plans issued at the unit level and by higher headquarters. The following areas should be addressed in site closure plans and/or SOPs:

- The disposition of reusable and recyclable materials.
- The termination of waste management contracts.
- The disposition of waste material generated through the deconstruction of the base camp.
- The closure and cleanup of incinerators, burn pits, and ash pits.
- The closure of composting and land farming operations and the cleanup of the sites.
- The disposition of hazmat and HW with instructions for cleanup of HWAPs and storage areas.
- The cleaning and disposition of equipment used in waste management areas.

- The disposition of medical waste.
- The proper closure and marking instructions for latrines.
- The proper shutdown of the reverse ROWPU, the disposition of the wastewater and brine lagoon, and the need for a water survey.
- The disposition of wastewater treatment systems.
- The disposition of above- and underground storage tanks.
- The cleanup of sorting, compacting, and customer drop-off areas and the disposition of customer drop-off containers.
- The disposition of trash receptacles, to include standards for turn-in.
- The removal of generators, fuel bladders, blivets, secondary containment liners, and associated fuel distribution equipment and the remediation standards necessary for any affected areas.
- The disposition of secondary containment and force protection berms.
- The disposition of landfills, with instructions for proper closure and marking.

Grid coordinates for waste management activities will be recorded and post-closure digital photographs of the sites should be taken. Both will be incorporated into the environmental site closure report that documents the ESCS.

This page intentionally left blank.

Chapter 4
Wastewater

Roughly 80 percent of all water used for purposes, including human consumption, ends up as wastewater and will require treatment and disposal. The volume of wastewater alone presents a significant challenge; and depending on the source, it may contain suspended solids, organic material, biological organisms, and toxic chemicals that will require treatment before disposal. This chapter expands upon the discussion presented in chapter 2 and describes how to develop a wastewater management plan. This chapter is organized into the two categories of wastewater: gray water and black water.

OVERVIEW

4-1. Commanders at every level must incorporate wastewater management planning throughout all phases of the MDMP to maintain optimal combat readiness, protect the environment, and promote a self-sustaining force. Wastewater is a much bigger issue than most planning takes into consideration. It must be accounted for from the beginning of the base camp life cycle. Initial master plans need to incorporate provisions for wastewater. Assuming that contractors will be available immediately to manage wastewater is problematic. A "pump and dump" contract is not the only or best solution to the wastewater issue, and other options should be explored and integrated into planning. Simple solutions that can be managed by troop labor or local nationals should be emphasized. A package wastewater treatment plant is also not the answer to the wastewater problem unless deployed with the unit and someone is trained and available to operate it. Package plants are expensive and take months to manufacture, ship, and install. Then, they usually require a contractor to operate and maintain. After contingency operations are concluded, many existing bases will be turned over for HN use. These package plants will fall into disuse and disrepair because the operation and maintenance of these systems may be beyond the expertise or interest of the local population.

GRAY WATER

4-2. Gray water includes the wastewater from laundry, showers, hand-washing devices, washracks, water purification systems, and dining facilities. Effectively managing gray water begins by understanding the requirements early in the planning phase. A gray water management plan is developed using the 6-step process described in chapter 2.

STEP 1. ANALYZE THE SITUATION

4-3. As discussed in chapter 2, waste management planners use the METT-TC variables to frame their assessment of the gray water situation. Table 4-1, page 4-2, shows METT-TC considerations that are focused on gray water.

4-4. At the beginning of mission analysis and continuing throughout the MDMP, waste management planners analyze where and how much gray water will be generated. They focus on where field services (specifically food services, laundry, and shower operations) and other sources of gray water (such as washracks) will likely occur in the operational area, based on the scheme of sustainment that is developed by logistics planners. Laundries are typically the largest source of gray water.

Table 4-1. Gray water considerations in relation to METT-TC

METT-TC Variables	*Considerations*
Mission	• Duration of the mission, to determine design and construction standards for gray water systems. • Likely locations where field services will be provided based on the scheme of support. • Other operations and activities that will generate gray water (such as hand-washing devices and vehicle washing).
Enemy	• Security considerations (local and nonlocal contractor access to base camps).
Terrain	• Prevalent wind direction for positioning wastewater systems downwind. • Surface configuration and the effects of elevation and slope on drainage. • Soil composition (soil type) and its drainage characteristics. Percolation tests are used in selecting and designing gray water systems. Ground that contains too much clay or caliche will preclude certain gray water devices. • Surface drainage, flood plains, surface water, and groundwater tables and the effects on gray water systems. • Man-made features (existing infrastructure and road access to facilities) that can support gray water management operations.
Weather	• Effects of heavy rainfall and storm runoff on gray water systems. • Effects of freezing temperatures on wastewater systems. • Effects of humidity and temperature on gray water systems. ▪ High humidity and cloud cover hinders the evaporation of water from evaporation beds. ▪ Freezing temperatures can impact absorption and evaporation.
Troops and support available	• Availability of specialized engineer units or contractors (local and nonlocal). • Availability of a medical detachment, PVNTMED, and other EAB support. • USACE and USAPHC support or assistance teams. • Availability of funds and contracting mechanisms (including local purchase).
Time available	• Time available to acquisition supplies, services (contractors), equipment, and materials. • Time available to construct wastewater systems. • Life span for wastewater systems (basic, expanded, and enhanced)
Civil considerations	• Environmentally sensitive or protected areas (including historical, religious, and cultural sites). • Construction standards and other policies and guidelines established for the theater of operations.

Legend:

EAB	echelons above brigade
METT-TC	mission, enemy, terrain and weather, troops and support available, time available, and civil considerations
PVNTMED	preventive medicine
USACE	U.S. Army Corps of Engineers
USAPHC	U.S. Army Public Health Command

4-5. The amount of water that will be supplied to a unit, for other-than-human consumption directly affects the amount of gray water that will be generated. The amount of gray water generated by shower and laundry facilities is approximately 100 percent of the amount of water provided; for dining facilities, approximately 70 percent. This relationship allows waste management planners to have a general understanding of where and how much gray water will be generated.

4-6. Knowing where gray water will likely be generated allows waste management planners to focus their analysis on determining the availability of existing wastewater facilities in those areas. They also consider the effects that the terrain (soil composition, surface configuration, and hydrology) and environmental considerations for those areas will have on gray water management. Waste management planners share their understanding of terrain effects, environmental considerations, and the availability of existing wastewater treatment facilities with sustainment planners to help in determining the best locations for shower, laundry, and dining facilities. Throughout the operations process, waste management and base camp planners work closely with logistics planners to ensure that the gray water management plan remains supportive of the sustainment plan as adjustments are made to both.

STEP 2. DEVELOP PRELIMINARY ESTIMATES

4-7. During this step, waste management planners develop preliminary gray water requirements for each subordinate unit (one level down) and for each maneuver COA being developed. Using a matrix, such as the sample work sheet shown in table 4-2, page 4-4, waste management planners begin this step by listing the primary sources of gray water, including dining facilities, laundries, showers, ROWPU (see paragraph 4-14), and washracks. Requirements for each source are then identified. Any quantifying information is also provided (such as the number of personnel that will be served at a dining facility). Planners then apply the appropriate generation rate (see table 4-3, page 4-5) to determine how much gray water will be generated (in gallons per day) for each requirement. Table 4-3 provides a wastewater generation projection for the immediate category requirements of less than one gallon per day, per person. If the unit is on the move, there is little likelihood that Soldiers will be taking showers, doing laundry, or washing vehicles. If the unit has a mobile kitchen and it is put to use, the gray water generation will be seen in meal preparation. Otherwise, they will be eating field rations and washing their hands with wet wipes. In this scenario, the gray water generated will probably be negligible, determined by the mission and unit capabilities. The projected washrack generation rate in table 4-3 is based on the usage of a diesel-powered, trailer mounted, hot water pressure washer, which delivers water at 5.2 gallons per minute under 3,500 pounds per square inch for 10 minutes per vehicle. If another water delivery system is used, the rate of gray water will vary. It is feasible that disinfected or filtered gray water generated from other activities could be collected and then used for vehicle washing if PVNTMED approves. Washrack operations can also provide a settling basin where gravity clarified water can be reused. When preparing gray water rough estimates for an entire base camp with enduring capabilities, a planning factor of 80 to 100 gallons per person, per day, can be used. This figure includes showers, latrines, dining facilities, laundries, washrack, leaks, and routine cleaning. This step concludes when all requirements (in gallons per day) for each source of black and gray water have been determined.

4-8. The generation rates are general guidelines. Planners consider other factors (for example, food ration cycles and the rationing of showers) to create the most accurate generation rates possible. They also consider the amount of water that will actually be supplied to those sources of gray water. When exact requirements are unknown, planners should use the highest generation rate as a precaution.

STEP 3. CATEGORIZE WASTE REQUIREMENTS

4-9. As described in chapter 2, the waste requirements for each subordinate unit (one level down) are categorized (immediate, basic, expanded, enhanced, and transfer and closure), based on expected duration. The categorized requirements are then developed in the work sheet seen in table 4-2. There can be more than one categorized requirement for the same activity during a period of time. For example, there may be immediate requirements that are being met with temporary wastewater devices while more enduring devices are being constructed to handle basic requirements.

Table 4-2. Sample gray water requirements work sheet

Subordinate Unit	Immediate						Basic					
	Number of Personnel	Generation Rate (lGPD/person)	Unit Generation Rate (GPD)	Duration (days)	Gray Water Generated	Required Resources (list resources required to manage the SW generated)	Number of Personnel	Generation Rate (lGPD/person)	Unit Generation Rate (GPD)	Duration (days)	Gray Water Generated	Required Resources (list resources required to manage the SW generated)
Battalion 1	700	.25	175	3	525	Soakage pit with grease trap	700	42	29,400	60	1,764,000	Evaporation pond, grease trap, collection and reuse, oil-water separator with a soakage pit
Company 1	100	.25	25	3	75	Soakage pit with grease trap	100	42	4,200	60	252,000	Evaporation pond, grease trap, collection and reuse, oil-water separator with a soakage pit

Notes.

1. This work sheet may be expanded to incorporate all subordinate units and phases of an operation.
2. The immediate gray water generation is primarily based on the unit mobile kitchen if available. Laundry, shower, and washrack usage is not likely to be a consideration for the immediate category.

Legend:

GPD gallons per day

SW solid waste

STEP 4. EVALUATE WASTE MANAGEMENT CAPABILITIES

4-10. Waste management planners evaluate the available capabilities and resources (manpower, equipment, materials, and funding) for each subordinate unit (one level down) according to the proposed task organization for each COA being developed. The results of this evaluation are placed in the work sheet seen in table 4-2. The evaluation of available capabilities will drive the generation of capability-based solutions in step 5.

STEP 5. GENERATE SOLUTIONS

4-11. Waste management planners first generate options that take advantage of existing wastewater treatment facilities, within the HN or within existing base camps established by the United States or other sending nations. When existing facilities and contractor support are not available, waste management planners generate capability-based solutions (such as soakage pits, trenches, and evaporation beds that are described beginning in paragraph 4-24) to meet the gray water requirements for each subordinate unit (one level down). They also consider ways that gray water can be recycled and reused to reduce the amount of gray water requiring disposal. For example, gray water from showers, sinks, and laundries can be collected in aboveground storage bladders, treated with ROWPU, disinfected, and reused for toilets, laundry, vehicle washing, firefighting, dust suppression, and construction activities. Solutions must be feasible (based on the availability of resources, subordinate unit capabilities, and soil conditions) and suitable for the OE. Solutions are placed in the appropriate column for each respective requirement with the corresponding tasks and resources (capabilities) needed to fulfill the requirement. The information placed within the work sheet should be as detailed as necessary to facilitate planning. The work sheet is continually refined as planning progresses and new information becomes available.

Table 4-3. Gray water generation rates within base camps

Source	*Gray Water Generation Rate*
On the move	.25 to 1 GPD
Enduring base camps (total gray water rule of thumb)	80-100 GPD/person
Showers (2.5 gal/min x 8 min = 20 gal x 1.5 showers/day in enduring base camps = 30 GPD)	20 to 30 GPD/shower
Latrines (female: 4 gal/flush x 10 flushes = 40 gal x number of personnel male: 4 gal/flush x 2 flushes = 8 gal + 8 gal urinal = 16 gal x number of personnel)	100 person HQ unit 20 percent female = 800 gal/day male = 1,280 gal/day total 2,080 gal/day or average of 2100 gal/day
Sinks (1 GPD/person if no one leaves the sink on while shaving or brushing teeth)	Best practices = 1 GPD/person
Cleaning (1-2 flushes/toilet plus 1 gal/sink, shower, and urinal)	10 toilets x 4 gal/flush x 2 = 80 gal 30 items x 1 gal = 30 gal Best practice = 110 GPD/100 persons
Food services	1 to 5 GPD/person
Quartermaster laundry company	64,000 GPD[1]
Washracks	52 gal/vehicle[2]
Reverse osmosis water purification	The amount of wastewater generated from this process will be based on the size of the reverse osmosis unit and the amount of usage it receives.
Hospitals	200 GPD/bed
Force provider (550-person module + 50 operators) Containerized latrine (4 CLS/ module, each with 6 commodes, 1 urinal, and 2 bay sink) Containerized batch laundry (200 pounds/hour) Containerized shower (2 CSS/ module, each with 12 stalls, average 10 minutes/shower/person/day) Food services (1,800 meals/day)	Approximate total capacity 30,000[3] GPD 3,465 GPD 5,200 GPD 11,000 GPD 1,375 GPD

Legend:

CLS	containerized latrine system
CSS	containerized shower system
gal	gallon(s)
GPD	gallons per day
HQ	headquarters
min	minute(s)

[1]This number is based on a traditional company capability without the use of water reclamation systems (for example, laundry advanced system and containerized batch laundry). If water reclamation systems are available for use, this number will be reduced.

[2]This number is based on a diesel-powered solar domestic hot water pressure washer system for 10 minutes per vehicle. If a different application system is used, the rate may vary.

[3]This number is not a total of the individual types of wastewater generated. This is a total available storage capacity.

4-12. Waste management planners must not constrain brainstorming or the generation of options based solely on capabilities currently available. They consider options that leverage emerging commercial technologies and best practices and incorporate those initiatives within future planning, to include base camp master planning.

STEP 6. INTEGRATE WASTE MANAGEMENT TASKS INTO PLANS AND ORDERS

4-13. Once a maneuver COA is selected and approved by the commander, waste management planners finalize the gray water management plan that supports that COA. Waste management planners coordinate and synchronize the supporting waste management tasks with other staff members and higher headquarters as necessary. The waste management tasks are then incorporated into plans and orders as described in chapter 2. Waste management tasks should be included in logistics rehearsals and mission briefs to ensure that the plans are feasible and supported by higher headquarters.

REVERSE OSMOSIS WATER PURIFICATION

4-14. ROWPU are used to provide potable water for deployed forces. Potable water is water that is safe to drink and free from pollution, harmful organisms, and impurities. There are different sizes and types of equipment that can be used to purify water (such as 600- and 3,000-gallon-per-hour ROWPU, 1,500-gallon-per-hour tactical water purification systems, and 125-gallon-per-hour lightweight water purifiers). Old technology is constantly being improved and new technology developed, but new technology is still based on the reverse osmosis filtration process. Therefore, there are commonalities: water will be pulled through the system from a source (well, lake, stream, pond); water will be filtered through a membrane; chemicals will be used to sterilize the water, make the water potable once filtered, and clean the membrane/system; and waste will be generated. It is imperative that operators and supervisors are familiar with the MSDSs for associated chemicals and that required PPE (hearing protection, face shield, chemical gloves, apron) is worn during the operation and handling of chemicals.

4-15. In addition to producing potable water, reverse osmosis units also produce waste that must be managed. The amount of waste generated will be determined by the size of the purification unit, the amount of time it is used, the amount of water it is required to clean, and the level of contaminants in the source water. There are several different points in the process where waste can be generated from the reverse osmosis process.

4-16. If the unit has a cyclone separator as part of the process, there will be sludge waste generated. There will be brine waste generated from the filtration process that may or may not include the backwash or reject water that is spit back into the reverse osmosis unit when it is shut down or preventive maintenance is required. When debris has built up on the filter, the system may push a blast of water backward to clear the filter. The brine, backwash, and water required to clear the filter will likely require the development of a brine wastewater lagoon for disposal. This brine water lagoon should be connected to the purple-pipe recycled water distribution system described in paragraph 4-20. ***Purple pipe*** **is a fully enclosed, recycled nonpotable-water distribution system that operates separately from potable-water systems and other nonpotable-water systems (such as those used to carry water to showers and sinks).** The brine water does not need to be filtered or sterilized before being added to the purple-pipe recycled water distribution system. The purple-pipe recycled water distribution system will reuse this nonpotable water, dilute the salt concentration with other filtered and disinfected gray water and, eventually, pass the brine water into the wastewater treatment process to be returned to the environment as naturally cleaned effluent.

4-17. Reverse osmosis units are required to be shut down for preventive maintenance and cleaned after a prescribed number of hours of use. The waste stream is likely to be hazardous due to the chemicals that are used to clean filtration membranes. The filter membranes will also have to be replaced periodically based on the amount of usage. These membranes may be hazardous, depending on the quality of the source water. Finally, the product water that is created, if not used, cannot be returned to the source directly because of the chemicals that are used to make the water potable. The water will be too clean, and the chlorine content would upset the ecological balance of the source water.

FIXED FACILITIES

4-18. Existing wastewater treatment facilities should be used whenever possible. Base camps should be placed near existing facilities that are functioning and have sufficient capacity to take advantage of the situation. Facility engineer assistance will be needed to make the required connections and access the system. Pretreatment through grease traps or filters may be required for the dining facility waste stream to remove grease and particulate matter, since it could affect the operation of the wastewater pumps. If facilities exist, but cannot be connected to due to operational considerations, gray water can be temporarily collected in containers (such as expandable pillow tanks or drums) and transferred to a wastewater treatment plant by military units or contractors when the situation allows. Because the necessary storage containers, wastewater tank trucks, and pumps likely will not be organic equipment in most units, this option requires extensive prior planning and coordination.

4-19. More permanent collection, treatment, and disposal facilities may be possible at enduring base camps. Small scalable package plants are also available as listed in the Army's Theater Construction Management System. Extensive general engineering support or contractors are required to build and maintain such systems.

4-20. Typically, gray water from showers, sinks, and laundry can be reused in a standard purple-pipe recycled water distribution system for toilets, irrigation, and vehicle washing. The piping generally used is a shade of purple to ensure that this piping system is never mistakenly interconnected to a potable water distribution system. Nonpotable water is water that is not drinking-water quality, but may still be used for other purposes. This water may come from a ROWPU before the necessary minerals to make it potable have been added), tanks of water that have been in storage too long for the chlorination to meet drinking-water requirements, or recycled water. The gray water generated from showers and sinks can be recycled into the purple-pipe recycled water distribution system. In most base camp designs, the toilets are on a separate plumbing loop from the showers and sinks so it is simple to set the toilet loop up on the purple-pipe recycled water distribution system. Water from purple-pipe storage tanks used to flush toilets will be processed into the black water system and then sent through the water treatment process, such as a lagoon system or water treatment facility. Purple-pipe water can also be used for washing vehicles and then collected and returned to the purple-pipe recycled water distribution system or collected in a separate collection system for the washrack. Wastewater, or brine, that is discharged from the ROWPU during the process of purifying the source water can be added to the purple-pipe recycled water distribution system for reuse. Figure 4-1, page 4-8, shows a flow chart of how the purple-pipe recycled water distribution system can be laid out. The use of a purple-pipe recycled water distribution system will save considerable amounts of water and bring the camp into a more sustainable posture. Force provider sets have a small reverse osmosis unit that can be ordered, which is specifically designed to work with the purple-pipe recycled water distribution system.

FIELD METHODS

4-21. Traditional field-expedient methods for disposing of gray water include soakage pits, soakage trenches, and evaporation beds. Based on soil characteristics and weather conditions, these methods will usually be sufficient to handle the generated gray water from laundry, shower, and dining facilities for short periods of time. Some general engineering or specialized engineer support may be required to construct and operate these field-expedient methods, and earthmoving equipment may be necessary, based on the volume of gray water generated. Waste management planners must attempt to identify these requirements and request augmentation as early in the planning phase as possible.

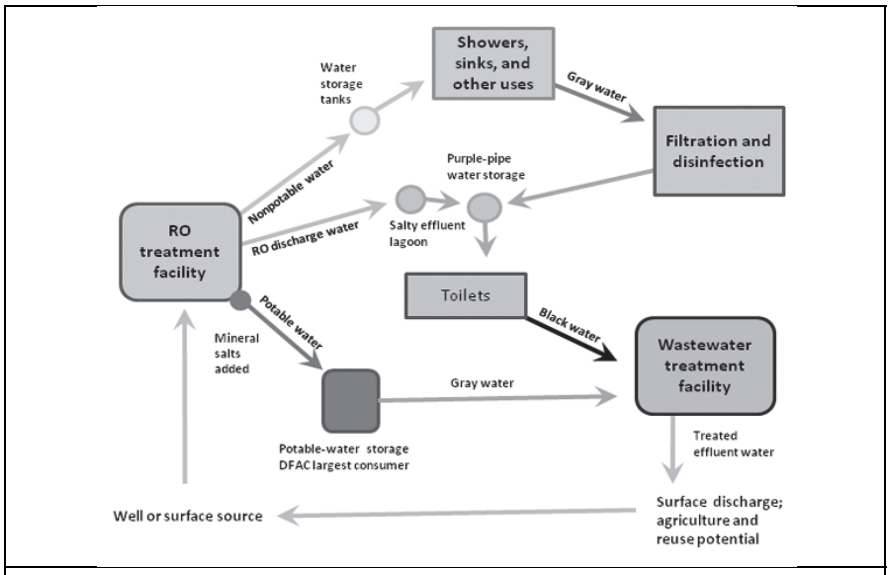

Legend:

DFAC	dining facility
RO	reverse osmosis

Figure 4-1. Purple-pipe recycled water distribution system diagram

4-22. These field-expedient devices, especially soakage pits, are generally constructed for small volumes of gray water, approximately 1,000 to 5,000 gallons per day for a company-size element. They can be effective for larger volumes depending on the site, resources available, soil types, existing infrastructure water table, and duration of occupation with proper design and operation. Since these methods are final disposal, some pretreatment may be necessary to remove grease, particulate matter, and organic material. Assistance in the form of technical advice may be obtained from supporting engineer units, PVNTMED personnel, higher headquarters, USACE and USAPHC support teams, or through reachback.

4-23. Soakage pits and evaporation beds may be impossible in arctic environments or in areas with high water tables. In these situations, the use of constructed wetlands or holding basins may be an alternative if the necessary heavy construction assets are available; if not, the only alternative may be to temporarily contain gray water in tanks or drums for removal by military units or contractors. Requirements for alternate methods must be identified as early in the planning phase as possible to facilitate long lead times for fund acquisition, contracts, project approval, design, and construction.

Percolation Test

4-24. Before selecting a gray water system, the absorption capability of the soil at the site must be determined by performing a percolation test or by obtaining preexisting data that may be available through geospatial engineer teams found at brigade and above. Percolation testing to determine surface drainage for evaporation beds and soakage pits and trenches is performed using the following steps:

- **Step 1.** Dig one or more holes 1 foot square by 1 foot deep.
- **Step 2.** Fill the test hole(s) with water and allow it to seep into the surrounding soil.
- **Step 3.** Refill the hole(s) to a depth of at least 6 inches while the bottom of the hole is still wet.
- **Step 4.** Measure the depth of the water and record the time it takes it to be absorbed into the soil.
- **Step 5.** Calculate the time required for the water level to drop 1 inch.
- **Step 6.** Use the time from step 5 to determine the application rate from table 4-4, page 4-9 (for evaporation beds), or table 4-5, page 4-9 (for soakage trenches).

Table 4-4. Application rate for evaporation beds

Soil Percolation Rate (1 inch)	*Application Rate (GPD)*
1 minute	57,700
2 minutes	46,800
5 minutes	34,800
10 minutes	25,000
30 minutes	12,000
60 minutes	8,700

Legend:
GPD gallons per day

Notes.
1. The rates in the table include allowances for resting, recovery, maintenance, and rainfall.
2. A percolation rate of more than 30 minutes indicates borderline suitability for soil absorption and other methods of wastewater disposal should be considered.
3. If the percolation rate exceeds 60 minutes, the soil is not suited for a soakage pit.

Table 4-5. Application rate for soakage pits and trenches

Soil Percolation Rate (1 inch)	*Application Rate (GPD/square foot of wall)*
1 minute	5.3
2 minutes	4.3
5 minutes	3.2
10 minutes	2.3
15 minutes	1.8
20 minutes	1.5
30 minutes	1.1
45 minutes	0.8
60 minutes	0.5

Legend:
GPD gallons per day

Soakage Pits

4-25. A standard soakage pit is constructed by digging a pit that is 4 feet square and 4 to 6 feet deep (figure 4-2, page 4-10). This size pit will handle about 200 gallons per day and accommodate a kitchen serving 200 personnel. When a soakage pit is used for kitchens, a grease trap is used as described in paragraphs 4-28 through 4-30. If the camp is to last for several weeks, construct soakage pits in pairs and alternate their usage on a daily basis to provide a rest period and help prevent clogging. A clogged soakage pit will not accept liquid and must be properly closed. To close a soakage pit, backfill and compact with soil 1 foot above the grade and mark the pit as described in paragraph 4-51.

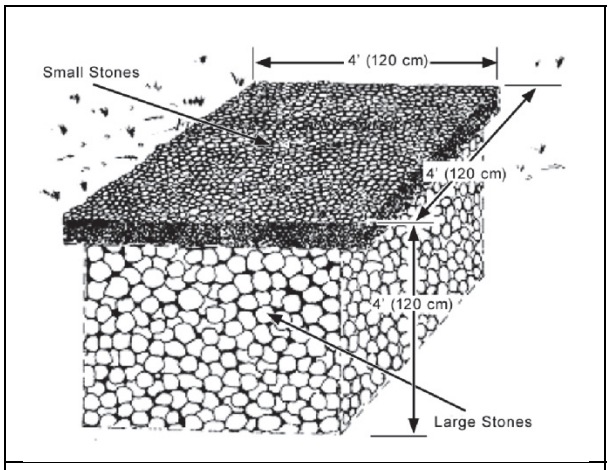

Legend:
cm centimeter(s)

Figure 4-2. Soakage pit

4-26. Pits should not be deeper than 6 feet to prevent the need for wall shoring during construction and further increase the construction effort. The bottom of the pit should be at least 2 feet above the groundwater table and 5 feet above rock or other impermeable soil conditions. The pits should be located outside the base camp if possible and at least 100 feet down gradient from any water source.

4-27. To accommodate a larger quantity of gray water, a longer, rectangular pit (not deeper) or several smaller pits may be dug. When more than one pit is used, ensure that there is equal distribution of the wastewater to all the pits. The distance between soakage pits should be at least twice the size of the pits. The effective absorption area of a pit or number of pits is based on the total area of the walls in the pit and not the bottom of the pit. To determine the required absorption area and soakage pit size or number of pits needed, waste management planners perform the following steps:

- **Step 1.** Perform a percolation test for surface drainage (see paragraph 4-23) twice—initially and again at the full estimated depth (6 feet deep or less).
- **Step 2.** Determine the application rate using table 4-5.
- **Step 3.** Find the required absorption area by dividing the total estimated effluent from the facility by the application rate. The effective absorption area is the total area of the walls in the pit; the bottom of the pit is not considered.
- **Step 4.** Divide the required absorption area (step 3) by 4 (the number of walls).
- **Step 5.** Divide the required absorption area per wall (step 4) by the depth of the pit (normally 6 feet). This will be the length of each wall. Remember, the bottom of the pit must be 2 feet above the groundwater table and 5 feet above any type of impermeable soil conditions.
- **Step 6.** Construct a pit or pits based on the wall length determined in step 5. Use several small pits rather than one large pit to reduce the required excavation effort. The distance between soakage pits should be at least twice the size of the pits.
- **Step 7.** Fill the pit with large stones or rubble. Wastewater should be piped in near the center of the pit. Tar paper, plastic, or some other material can be used as a cover to prevent rainwater from entering the pit. The required size of a soakage pit is based on the results of a percolation test and the estimated amount of effluent from a facility.

Soakage Trenches

4-28. If the groundwater level or a rock formation prevents digging a pit, a soakage trench may be used. A soakage trench consists of a central pit that is 2 feet square and 1 foot deep. The pit has a trench radiating outward from each side for a distance of 6 or more feet (see figure 4-3, page 4-11). The trenches are 1 foot wide and increase in depth from 1 foot at the central pit to 1 1/2 feet at the outer end. The central pit and the radiating trenches are filled with gravel or broken rock. Two units are built for every 200 persons being

provided food, laundry, and shower services; their usage is alternated on a daily basis. A grease trap is used with the soakage trench for kitchen waste. The trench is closed as described in paragraph 4-51. The length of the trench may vary as required. The procedure for determining the length of soakage trenches is similar to that for a soakage pit and is outlined below:

- **Step 1.** Perform a percolation test for surface drainage (see paragraph 4-23).
- **Step 2.** Determine the application rate using table 4-5, page 4-9.
- **Step 3.** Determine the required absorption area by dividing the total estimated flow from the facility by the application rate.
- **Step 4.** Divide the absorption area (step 3) by 8 (four radiating trenches; each trench has two walls).
- **Step 5.** Divide the wall area from step 4 by the average depth of 1.25 feet, since each trench is 1 foot deep at the central end and 1.5 feet at the far end.
- **Step 6.** Construct the soakage trench with four trenches of the determined length (step 5), each radiating from the central pit.

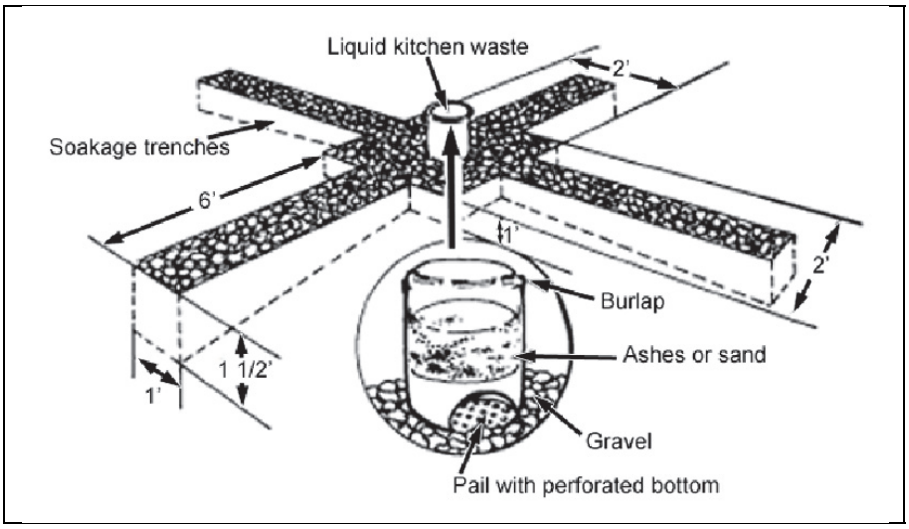

Figure 4-3. Soakage trench with barrel filter grease trap

Grease Traps

4-29. The gray water generated from dining facilities is heavily contaminated with food particles, cooking oils, grease, detergents, and other cleaning agents that can clog the soil and prevent absorption. A grease trap must be provided for soakage pits that accept kitchen waste. Grease traps are constructed to remove these contaminates from the gray water before disposal. Grease traps must be cleaned frequently and the contents burned or buried according to the guidance or procedures established for the theater of operations. A grease trap should be large enough to prevent the addition of hot, greasy water from heating the cool water already in the trap. Otherwise, grease will pass through the trap instead of congealing and rising to the top of the water.

Baffle Grease Trap

4-30. A baffle grease trap is constructed from a 55-gallon drum or box (see figure 4-4, page 4-12). The box or drum is divided vertically into unequal chambers by a wooden baffle. This baffle should extend to within 1 inch of the bottom. Waste is poured through a strainer into the large chamber. It then passes under the baffle and flows out into the small chamber. In the large chamber, the trap should have a removable lid and a strainer. The strainer may be a box with openings in the bottom. Fill the strainer with straw or burlap to remove coarser solids. Clean the strainer frequently by scrubbing it with soap and water to prevent clogging. Insert a 1-inch pipe 3 to 6 inches below the top of the smaller chamber to carry liquid from the

trap to the soakage pit. Clean the trap frequently to ensure proper operation. Remove the grease, drain the trap, and remove the sediment from the bottom. Burn or bury the grease, sediment, and strained material.

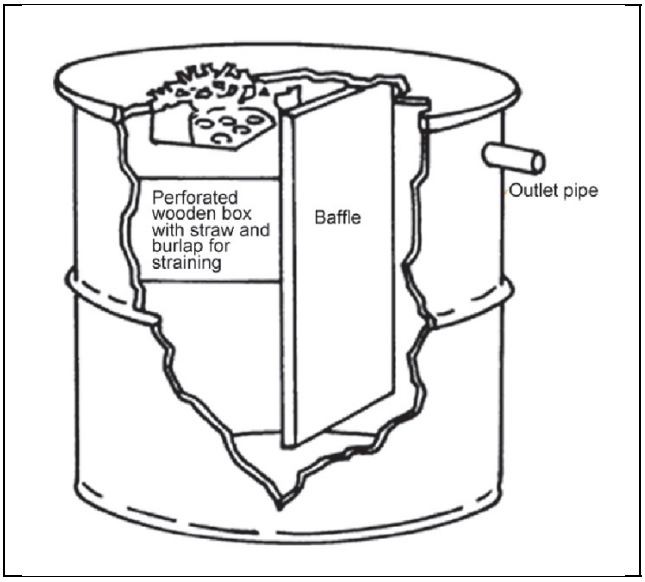

Figure 4-4. Baffle grease trap

Barrel Filter Grease Trap

4-31. The barrel filter grease trap is constructed from a 30- to 55-gallon barrel or drum (see figure 4-5). Remove the barrel top and bore a number of large holes into the bottom. Place 8 inches of gravel or small stones in the bottom of the barrel, and cover them with 12 to 18 inches of wood ashes or sand. Fasten a piece of burlap to the top of the barrel to serve as a coarse strainer. Place the trap directly over the soakage pit or on a platform with a trough leading to the pit. If the trap is placed over the pit, remove the bottom instead of boring holes into it. Empty the trap every 2 days. Wash the trap, remove and bury the ashes or sand, and refill the trap with fresh ashes or sand. Wash the burlap strainer every day or replace it.

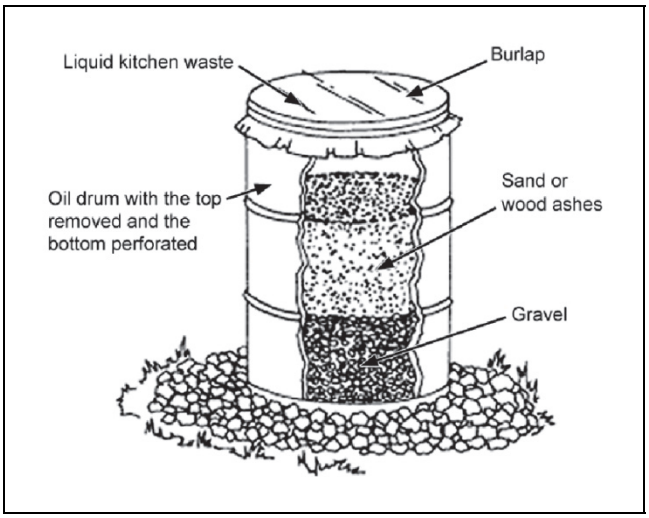

Figure 4-5. Barrel filter grease trap

Evaporation Beds

4-32. An evaporation field is probably the simplest method of disposing of large amounts of gray water. Evaporation beds (see figure 4-6) may be used in hot, dry climates or in places where a high groundwater table or clay soil (poor soil percolation) prevents the use of standard soakage pits. Evaporation beds configured in three tiers (see figure 4-7, page 4-14) can be used when confined by available land area.

4-33. Evaporation beds measure 8 by 10 feet. Construct sufficient beds to allow 3 square feet per person, per day, for kitchen waste and 2 square feet per person, per day, for wash and shower waste. Space the beds so that the waste can be distributed to any one of the beds. Scrape the topsoil to the edges, forming a small dike around the bed. Spade the earth in the bed to a depth of 10 to 15 inches. Rake it into a series of rows, with the ridges approximately 6 inches above the depression. Form the rows lengthwise or crosswise, depending on which one allows the best water distribution. Locate the beds outside the base camp and in an open, sunny area. Give careful attention to the proper rotation, maintenance, and dosage of the evaporation beds. If used properly, the beds create no insect problems and only a slight odor. For determining the number or size of evaporation beds needed, waste management planners perform the following steps:

- **Step 1.** Perform a percolation test (see paragraph 4-23). The test should be performed in at least three or four locations over the area of the proposed field.
- **Step 2.** Determine the application rate from table 4-4, page 4-9. The rates in the table include allowances for resting, recovery, maintenance, and rainfall.
- **Step 3.** Divide the total daily effluent by the application rate to determine the required acreage.
- **Step 4.** Construct enough beds or a single bed that is sufficiently sized to equal the area calculated in step 3.

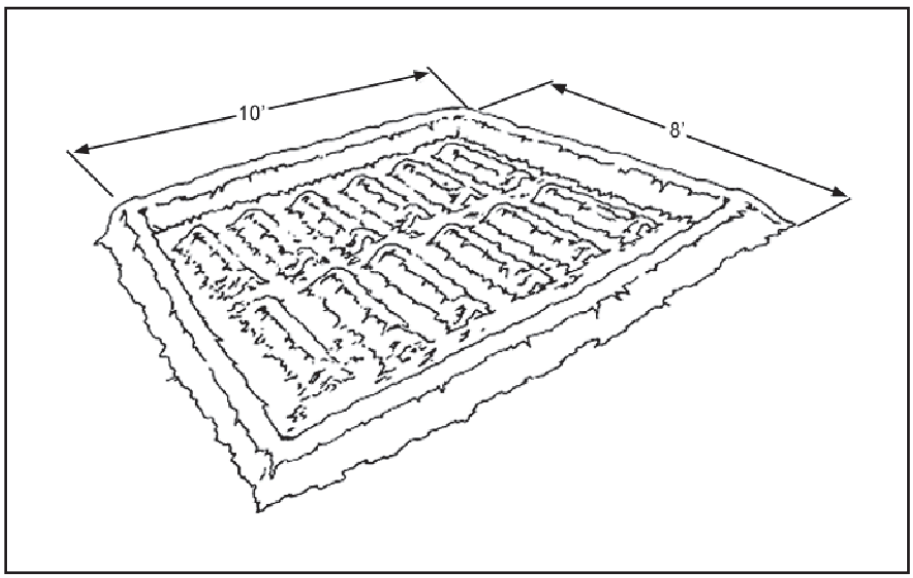

Figure 4-6. Evaporation bed

4-34. During the day, flood one bed with wastewater to the top of the ridges. This is equivalent to an average depth of 3 inches over the bed. Allow the wastewater to evaporate and percolate. After 3 or 4 days, the bed is usually sufficiently dry for respading and reforming. Flood the other beds on successive days and follow the same sequence of events. Give careful attention to proper rotation, maintenance, and dosage. It is essential that kitchen waste be run through an efficient grease trap (see paragraph 4-28) before putting the waste in an evaporation bed. If used properly, evaporation beds will not create an insect hazard or emit strong odors.

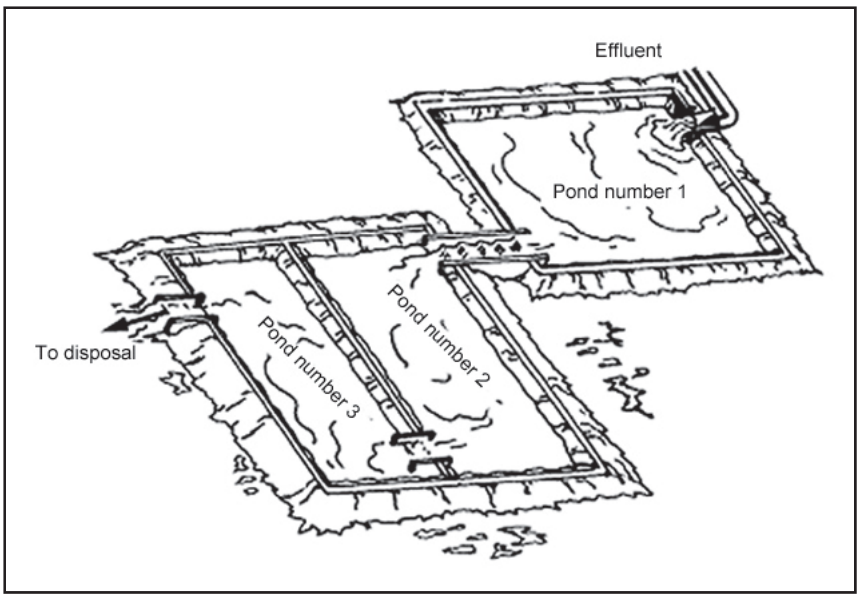

Figure 4-7. Three-tier evaporation beds

Soakage Areas

4-35. Every device used for washing or drinking should have a soakage area. Soakage areas prevent pools and mud from forming. Excavate the area underneath and a few inches around hand-washing devices, washracks, and lister bags. Fill the areas with small, smooth stones to form a soakage pit. Ensure that wastewater from washracks is passed through an oil-water separator before it enters a soakage pit or trench. Each field shower only requires one soakage pit or trench.

Oil-Water Separators

4-36. The gray water generated from washracks must be treated through an oil-water separator. A field expedient washrack with an oil-water separator is shown in figure 4-8, page 4-15. Washracks should be constructed to prevent wastewater pollution as much as possible. The location of each proposed washrack should be coordinated with the unit or base camp environmental officer before beginning construction. To help oil-water separators function properly, controls must be established to prevent POL products, solvents, or antifreeze from being dumped into the drainage system. An oil-water separator is not a disposal system, but a filtering mechanism. It is also necessary to ensure that emulsifying agents (such as soaps, detergents, and solvents) are prevented from being used during the vehicle-washing process in conjunction with the oil-water separators. Emulsifying agents will collect oil-based material and carry it straight through the system, thereby rendering the system ineffective for its intended purpose. Trash cans should be situated nearby for the collection of general refuse to prevent trash from being swept out of the vehicles and piling up around the washrack. Oil-water separators should be regularly inspected to ensure that they are functioning properly. As base camps mature, more permanent washracks should be constructed according to Engineering Technical Letter (ETL) 1110-3-466.

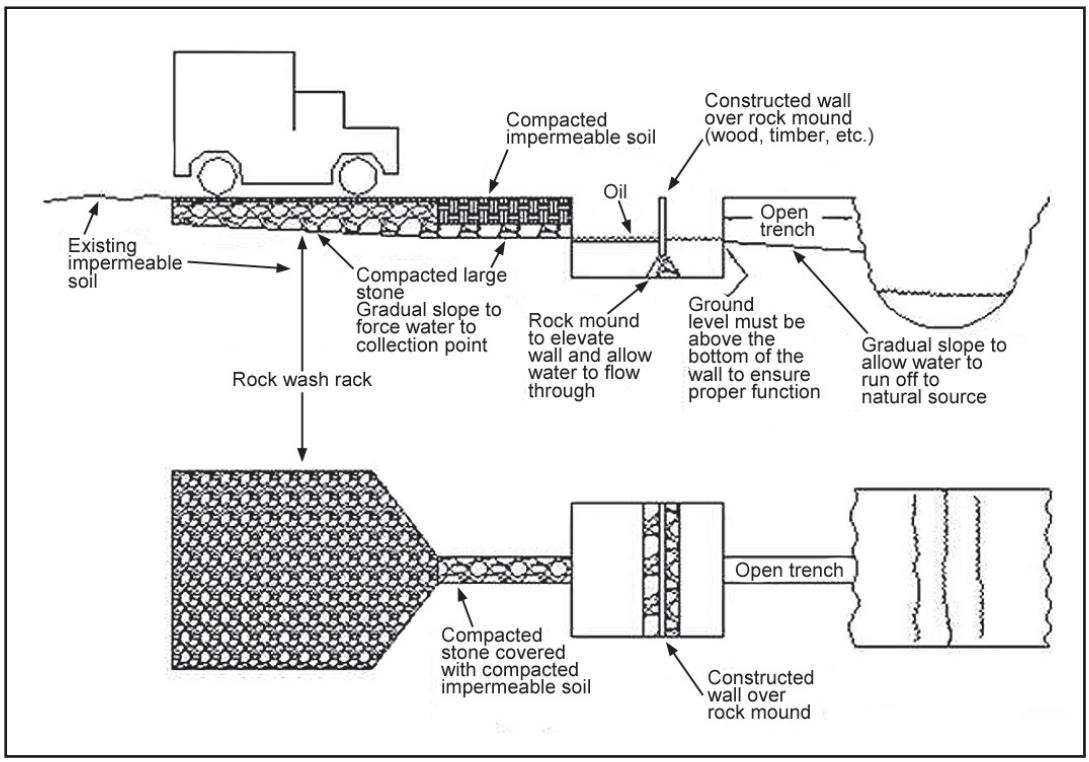

Figure 4-8. Oil-water separator

BLACK WATER

4-37. Black water refers to latrine water containing human waste. The effective treatment and disposal of black water (to include the waste generated by service animals such as military working dogs) must be accomplished to prevent disease and to ensure that an area does not become infested with insects or rodents that can spread disease. Effectively managing black water begins by understanding the requirements early in the planning phase. A black water management system is developed using the 6-step process described in chapter 2.

STEP 1. ANALYZE THE SITUATION

4-38. As discussed in chapter 2, waste management planners use the METT-TC variables to frame their assessment of the black water situation. Table 4-6, page 4-16, shows METT-TC considerations that are focused on black water.

4-39. At the beginning of mission analysis and continuing throughout the MDMP, waste management planners attempt to gain a better understanding of where black water will be generated based on the array of forces. Knowing where forces will be positioned allows waste management planners to focus their analysis on determining the availability of existing toilet and treatment facilities in those areas. In addition, waste management planners must determine the effects that the terrain (soil composition, surface configuration, and hydrology) and environmental and civil considerations will have on burning and/or burying human waste in those areas. Waste management planners must also focus on expected situations where units will be stationary for more than 72 hours, which is usually when field-expedient methods tend to become unsuitable for a specific location.

Table 4-6. Black water considerations in relation to METT-TC

METT-TC Variables	*Considerations*
Mission	• Duration of operations and locations where units will likely be stationary for more than 72 hours. • Duration of the mission to determine design and construction standards for fixed latrine facilities and sewage treatment systems within base camps.
Enemy	• Consideration for security (local and nonlocal contractor access to base camps).
Terrain	• Composition of soil and effects on digging field latrines. • Effect of burying human waste to surface drainage, surface water, and groundwater. • Use of man-made features (existing latrines and sewage treatment facilities).
Weather	• Effects of heavy rainfall and storm runoff on field latrines and sewage systems. • Prevalent wind direction for positioning wastewater systems downwind. • Effects of freezing temperatures on wastewater systems. • Effects of humidity and temperature on evaporation and decomposition. High humidity and cloud cover hinders the evaporation of water from gray water lagoons and evaporation beds (coastal desert areas).
Troops and support available	• Availability of specialized engineer units or contractors (local and nonlocal). • USACE and USAPHC support or assistance teams. • Availability of funds and contracting mechanisms (including local purchase).
Time available	• Time available to acquisition supplies, services (contractors), equipment, and materials. • Time available to construct wastewater systems. • Life span for wastewater systems (basic, expanded, and enhanced).
Civil considerations	• Environmentally sensitive or protected areas (including historical, religious, and cultural sites). • Construction standards and other policies and guidelines established for the theater of operations.
Legend: METT-TC USACE USAPHC	 mission, enemy, terrain and weather, troops and support available, time available, and civil considerations U.S. Army Corps of Engineers U.S. Army Public Health Command

STEP 2. DEVELOP PRELIMINARY ESTIMATES

4-40. For black water, step 2 is performed in combination with step 3 below. Waste management planners develop preliminary black water requirements for each subordinate unit (one level down) and for each maneuver COA being developed. Preliminary black water requirements (such as toilets, storage, disposal methods, and required equipment) are based primarily on the number and gender of personnel within a unit. Using a matrix (see table 4-7, page 4-17), waste management planners begin this step by listing each subordinate unit with its personnel strength (including the number of males and females), based on the task organization for each COA. Planners then determine the black water requirements for each critical event or phase of the operation, based on the expected duration that a unit will be in a certain location using the categories shown in step 3. To determine the number of toilets (with urinals if possible) required, multiply the total number of males by 4 percent and the total number of females by 6 percent, rounding up to the nearest whole number. One force provider module generates approximately 3,465 gallons of black water per day.

STEP 3. CATEGORIZE WASTE REQUIREMENTS

4-41. As described in chapter 2, the black water requirements for each subordinate unit (one level down) are categorized (immediate, basic, expanded, enhanced, and transfer and closure), based on expected duration. The categorized requirements are then shown within the requirements column in the work sheet (see table 4-7).

STEP 4. EVALUATE WASTE MANAGEMENT CAPABILITIES

4-42. Waste management planners evaluate the available capabilities and resources (manpower, equipment, materials, and funding) for each subordinate unit (one level down) according to the proposed task organization for each COA being developed. The results of this evaluation will drive the generation of capability-based solutions in step 5.

Table 4-7. Sample black water requirement work sheet

Subordinate Unit	*Immediate*									*Basic*	
	Number of Personnel	*Number of Males*	*Number of Females*	*Duration (days)*	*Required Resources (list resources required to manage the SW generated)*	*Number of Personnel*	*Number of Males*	*Number of Females*	*Duration (days)*	*Number of Latrines*	*Required Resources (list resources required to manage the SW generated)*
Battalion 1	700	500	200	3	Field expedient latrines, brief relief bags, shovels	700	500	200	60	20 male 12 female	Field expedient latrines until Force Provider is set up and a contract is in place for waste removal from the wastewater storage tanks.
Company 1	100	80	20	3	Field expedient latrines, brief relief bags, shovels	100	80	20	60	4 male 2 female	Field expedient latrines until contracts are in place for the delivery of chemical latrines.

Notes.

1. This work sheet may be expanded to incorporate all subordinate units and phases of an operation.
2. When figuring the necessary number of latrines, use the ratio of one commode for 4 percent of the number of males and one for 6 percent of the number of females.

Legend:

SW solid waste

STEP 5. GENERATE SOLUTIONS

4-43. Waste management planners first generate options that take advantage of existing buildings with adequate toilet facilities and sewerage systems, without risking the mission. Commanders must decide if the added health benefits offset tactical considerations. When existing facilities and contractor support are not available, waste management planners generate capability-based solutions (such as field latrines that are described beginning in paragraph 4-45 and treatment systems that are described beginning in paragraph 4-70) to meet the black water requirements for each subordinate unit (one level down). There may also be interim solutions, to include the temporary containment of black water in tanks and other large containers for treatment at a later time or for transportation to an approved treatment site elsewhere in the theater of operations. These may be referred to as *holding tanks* or *bladders*, and it is very important that they be clearly labeled with their contents to ensure that they are not confused with potable-water bladders.

4-44. Solutions must be feasible (based on the availability of resources and subordinate unit capabilities) and suitable (based on the risks to human health and the environment). PVNTMED personnel and the unit's field sanitation team are critical in determining the right type, location, number, and size of field latrines.

When planning basic and enhanced black water management systems (waterborne sewerage systems), waste management planners must coordinate with base camp planners and others involved in conducting BCDP, to include engineer units and contractors that will actually build the base camp. Solutions are placed in the appropriate column for each requirement as shown in table 4-7, with the corresponding resources (tasks and capabilities) needed to fulfill the requirement. The information placed within the work sheet should be as detailed as necessary to facilitate planning. The work sheet is continually refined as planning progresses and new information becomes available.

STEP 6. INTEGRATE WASTE MANAGEMENT TASKS INTO PLANS AND ORDERS

4-45. Once a maneuver COA is selected and approved by the commander, waste management planners finalize the black water management plan that supports that COA. Waste management planners coordinate and synchronize the supporting waste management tasks with other staff members and higher headquarters as necessary. The waste management tasks are then incorporated into plans and orders as described in chapter 2. Waste management tasks should be included in logistics rehearsals and back briefs to ensure that the plans are feasible and supportable by higher headquarters.

FIELD LATRINES

4-46. When fixed facilities are unavailable, units must use field-expedient methods to ensure proper sanitation. During short halts when units are on the move, Soldiers should use a commercially available disposable human waste bag or a cat hole latrine. When initially establishing a base camp, chemical latrines provided and serviced by contractors are preferred, followed by the use of deep-pit latrines and urine soakage pits or burn-out latrines if unable to dig or the water table is shallow. Other options include mound, bored-hole, or pail latrines. Whenever possible, urinals should also be provided to prevent toilet seats from being soiled.

General Considerations for Constructing and Closing Latrines

4-47. The following guidelines apply to the construction of all types of latrines, except cat holes.

Location

4-48. Latrines should be located at least 100 meters (300 feet) downwind (based on prevailing winds) and down gradient from food service facilities and at least 30 meters (90 feet) from the nearest water source. Latrines are usually built at least 30 meters (90 feet) from unit billeting and work areas, with equal access to its intended users. Latrines should not be dug below the groundwater table or where they may drain into a water source. The groundwater table can be determined from geospatial data sources, from local inhabitants, or by excavating until water is reached.

4-49. Latrines should be lighted at night if the tactical situation permits or staked off with rope or tape to serve as a guide. Place a canvas or brush screen around each latrine or enclose it in a tent. If possible, heat the shelter in cold climates. A drainage ditch should be constructed around screens or tents that enclose the latrine to keep out surface drainage.

Hand-Washing Device

4-50. A simple hand-washing device should be installed outside each latrine enclosure. The device should be easy to operate and have a constant supply of water or alcohol-based hand sanitizer. The importance of hand-washing devices must be emphasized and enforced throughout the unit. A gravel or rock surface should be placed underneath the hand-washing station to help keep the surrounding area from becoming muddy.

Maintenance

4-51. Latrines should be policed daily. Specific units or individuals should be assigned the responsibility for ensuring that the latrines are properly cleaned, using antibacterial soap and water or a disinfectant, and that adequate cleaning supplies are kept on hand. For fly control, spray the shelter with an insecticide twice

a week or use flytrap bags, which are often easier to acquire and are not a HW upon disposal. If fly problems persists, spray the pit contents and box interior twice a week with a residual insecticide or use fly strips. Fly strips also work on gnats, which can also be an issue.

Closing

4-52. A latrine pit is closed when it is filled to within 1 foot of the surface or when it is being abandoned. Remove the latrine box, and close it as follows:

- Fill the pit to the surface with successive, 3-inch layers of earth. Pack each layer down.
- Place a l-foot mound of dirt over the length of the pit to prevent fly pupa from getting out of the closed latrine.
- Place a rectangular sign on top of the mound. The sign should indicate the type of pit, date closed, and unit designation if the situation allows.

Chemical Latrines

4-53. Chemical latrines are the preferred human waste disposal devices in the field when the necessary services (primarily contractors) to sustain them are available and suitable for the situation. When chemical latrines are not available, individuals and units must use field-expedient devices, which are further described below. Chemical latrines should be cleaned daily and the contents pumped out for disposal in an appropriate sewage system. The frequency for emptying is determined by the demand for use of the device. Waste management planners must ensure that chemical latrine contracts stipulate all necessary requirements and are inspected for compliance. This includes verifying that the contractor (to include subcontractors) is properly disposing of the contents in a manner that protects human health and the environment. This typically means following the trucks by air or ground.

Cat Hole Latrine

4-54. The simplest of all human waste disposal devices is the cat hole latrine (see figure 4-9). This latrine is used by individuals who are on the move or stationary for 1 to 3 days when other established means are unavailable. A cat hole latrine should be dug at least 1 foot wide and 1 foot deep. After use, the removed dirt is replaced and packed down.

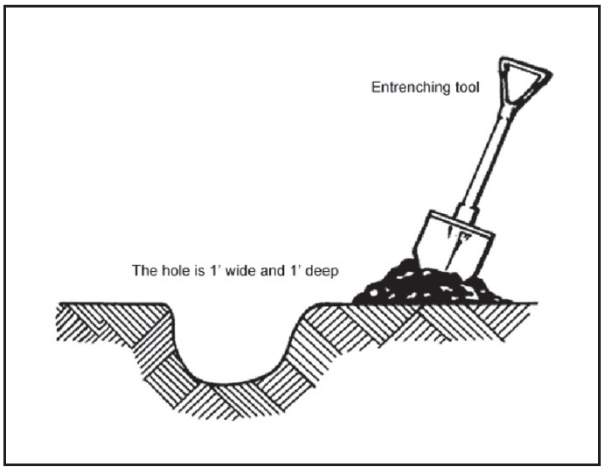

Figure 4-9. Cat hole latrine

Straddle Trench Latrine

4-55. The most common type of latrine for units that are stationary for 1 to 3 days is the straddle trench (slit trench) latrine shown in figure 4-10. The trench is dug 1 foot wide, 2 1/2 feet deep, and 4 feet long and will accommodate two people at the same time. To determine the number of saddle trenches required, multiply the total number of males by 2 percent and the total number of females by 3 percent, rounding up to the nearest whole number. For example, a unit of 100 men and 50 women would require 4 trenches for men and 3 for women. Trenches are constructed parallel to one another and at least 2 feet apart. The

removed earth is piled at the end of the trench, and a shovel or paddle is provided so that individual Soldiers can promptly cover their excreta and toilet paper. Since there are no seats on this type of latrine, boards may be placed along both sides of the trench to provide better footing. Toilet paper should be placed on suitable holders and protected from inclement weather by a tin can or other covering. The straddle trench latrine is closed using the method described in paragraph 4-51.

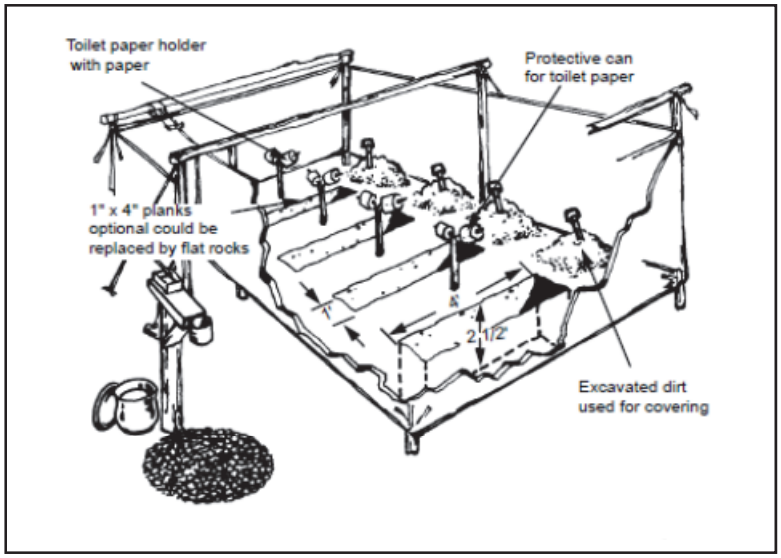

Figure 4-10. Straddle-trench latrine

Deep-Pit Latrine

4-56. The deep-pit latrine (see figure 4-11, page 4-21) is used with a standard four-seat latrine box that is issued to, or built by, the unit. The latrine box, prefabricated (National Stock Number [NSN] 5450-00-783-5720), is a partially assembled structure of plywood, reinforced with hardwood strips. It consists of a base sill with four hinged side panels and a top panel with holes that are covered with lids fitted with spring hinges and metal stays. It may be furnished with angle iron bars for connecting to an adjoining box. It is designed to be assembled in the field and installed over an excavation. The four-seat box is 8 feet long, 2 1/2 feet wide at the base, and 18 inches high. A unit of 100 Soldiers requires two four-seat latrine boxes. The pit is dug 2 feet wide and 7 1/2 feet long, which allows 3 inches of earth to support the box on all sides. The depth of the pit depends on the estimated life span of the latrine. As a guide, a depth of 1 foot is allowed for each week of estimated use, plus 1 foot of depth for dirt cover when the latrine is closed. Rock or high groundwater levels may limit the depth of the pit, but it should be no more than 6 feet deep to reduce the risk of the walls caving in. Support may also be needed in some types of soil, in which case planking or other similar material should be used. Pack the earth tightly around the bottom edges of the box to seal any openings and keep the lids closed and the latrine box clean to prevent fly breeding and reduce odors. If a fly problem exists, a residual pesticide can be used. The box and latrine seats should also be scrubbed daily with soap and water. This latrine will be used until it is filled to within 1 foot of the top. The length of time this latrine will be used before closing depends on the number of personnel using it. One trench, as described above and dug 6 feet deep, will service 50 Soldiers for approximately 5 weeks.

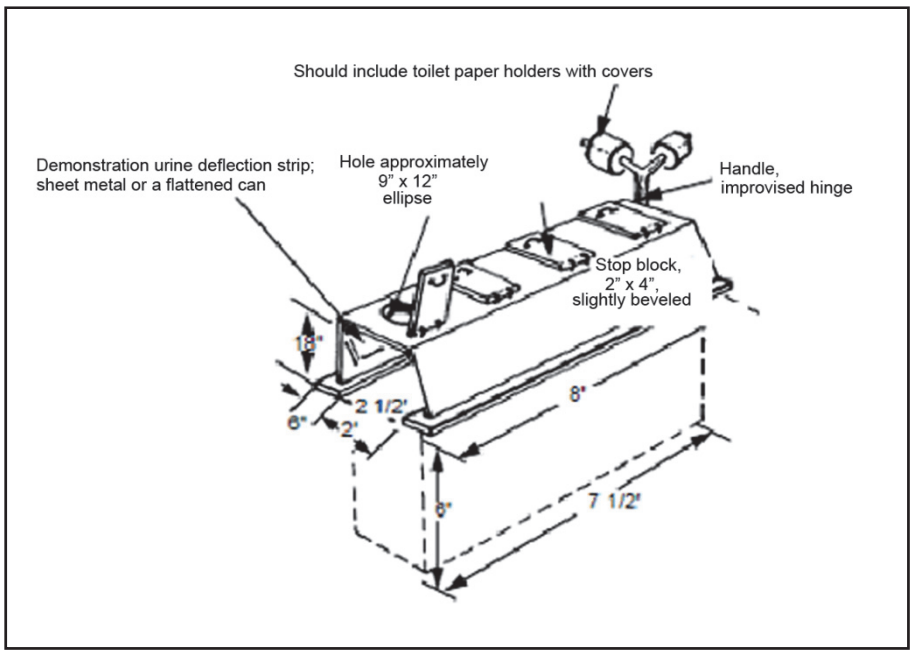

Figure 4-11. Deep-pit latrine

Bored Hole Latrine

4-57. A bored hole latrine (see figure 4-12) consists of a hole that is about 18 inches in diameter and 15 to 20 feet deep. It can be quickly emplaced with heavy equipment that has an auger attachment. The actual diameter of the hole is not critical and should be based on the largest size auger available. The hole is covered by a one-hole latrine box, using a metal drum with both ends removed that is sunk into the ground. It has a fly proof seat cover and lid that fit the top of the drum. If a drum is not available, construct a fly proof, wooden box that is 18 inches high. This latrine will be used until it is filled to within 1 foot of the top. The length of time this latrine will be used before closing depends on the number of personnel using it.

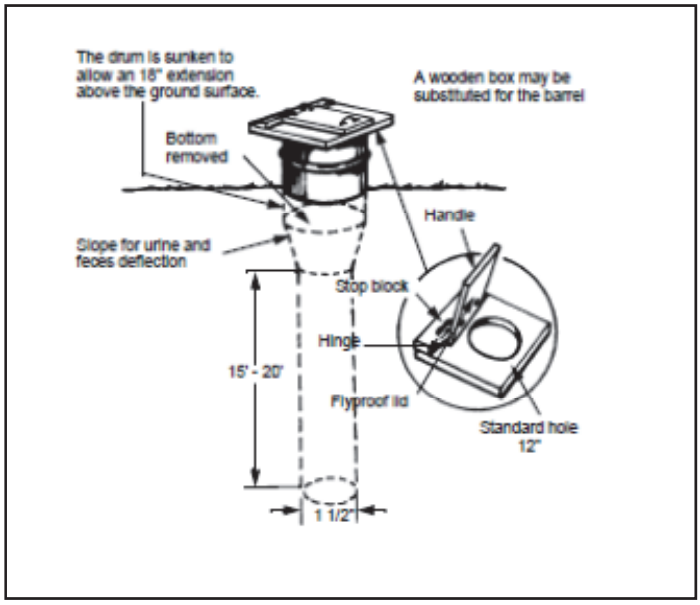

Figure 4-12. Bored hole latrine

Urine Disposal Facilities

4-58. Urine disposal facilities should be provided for males within the unit. These facilities should be collocated with male latrines to prevent toilets from being soiled. Urine should be drained from the urinals into a soakage pit, a standard deep-pit latrine (if the urinals are constructed in conjunction with the latrine) or a chemical latrine. The urine may be drained into a pit latrine through a pipe, hose, or trough. If a soakage pit is used, it should be dug 4 feet square and 4 feet deep and filled with rocks, flattened tin cans, bricks, broken bottles, or similar nonporous rubble. At least one urine disposal facility is required for each male latrine or for every 100 males.

Urine Soakage Pit

4-59. The best device for urine disposal in the field is a urine soakage pit (see figure 4-13). The pit is dug 4 feet square and 4 feet deep and filled with an aggregate material. A border is placed along each edge so that each side of the soakage pit surface is 5 feet long. The border should be 6 inches wide, 4 inches deep, and composed of small stones. Depending on available materials, use pipe urinals or trough urinals with this pit. For the urine soakage pit to function properly, Soldiers must not be allowed to urinate on the surface of the pit. An optional feature is ventilating shafts with screened openings that extend from about 8 inches above the pit to within 6 inches of the bottom of the pit. The funnels or trough must be cleaned daily with soap and water. The funnels must be replaced as necessary. Oil and grease must never be poured into the pit, as they will clog it. When a urine soakage pit is to be abandoned or it becomes clogged, it is sprayed with a residual insecticide and mounded over with a 2-foot covering of compacted earth.

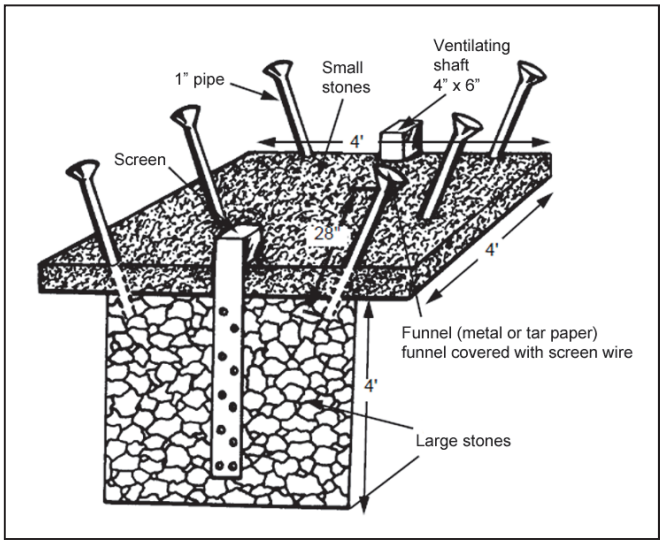

Figure 4-13. Urine soakage pit with pipe urinals

Pipe Urinals

4-60. Pipe urinals should be at least 1 inch in diameter and approximately 39 inches long. They should be placed at each corner of the soakage pit and, if needed, on the sides, halfway between the corners. The pipes are inserted at least 8 inches below the surface of the pit. A funnel made of tar paper, sheet metal, or similar material is placed in the top of each pipe and covered with a screen. The upper rim of the funnel should extend about 30 inches above the ground surface.

Trough Urinal

4-61. A trough urinal (see figure 4-14, page 4-23) is used when a more permanent facility is required and the necessary materials are available. The U- or V-shaped trough is about 10 feet long and made of sheet metal or wood. If wood is used, it must be lined with heavy tar paper. The legs supporting the trough are cut slightly shorter on one end, where a pipe carries the urine into the soakage pit or latrine pit.

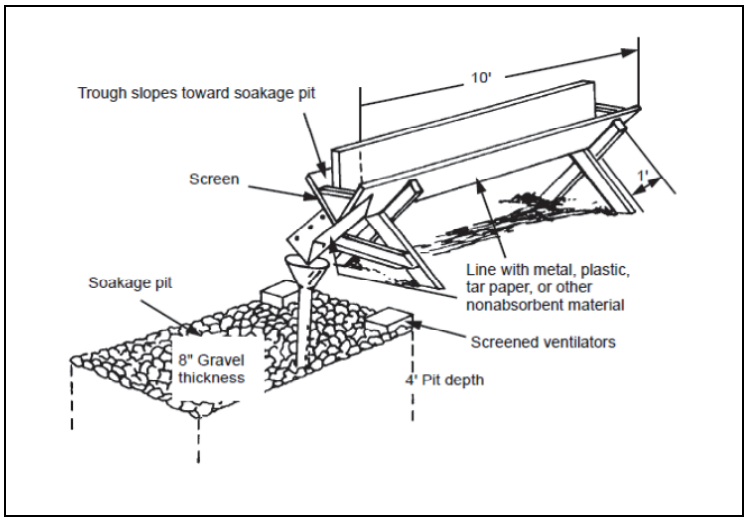

Figure 4-14. Trough urinal

Urinoil

4-62. In areas where the groundwater level is more than 3 feet below the surface, the urinoil (see figure 4-15) is an acceptable substitute for other types of urine disposal facilities. The urinoil is a 55-gallon drum, containing oil, which is placed over a recessed soakage pit. Waste POL can be used, but vegetable oil is preferred. Urine voided through the screen immediately sinks through the oil where it is trapped at the bottom of the drum. As urine is added, the level rises within the 3-inch-diameter pipe. This continues until the level reaches the 1 1/2-inch notch on the overflow pipe in the center of the drum. The oil acts as an effective seal against odors and flies. The screen is easily lifted with attached hooks for the removal of debris. The urinoil will operate in place as long as the soakage pit will accept the urine.

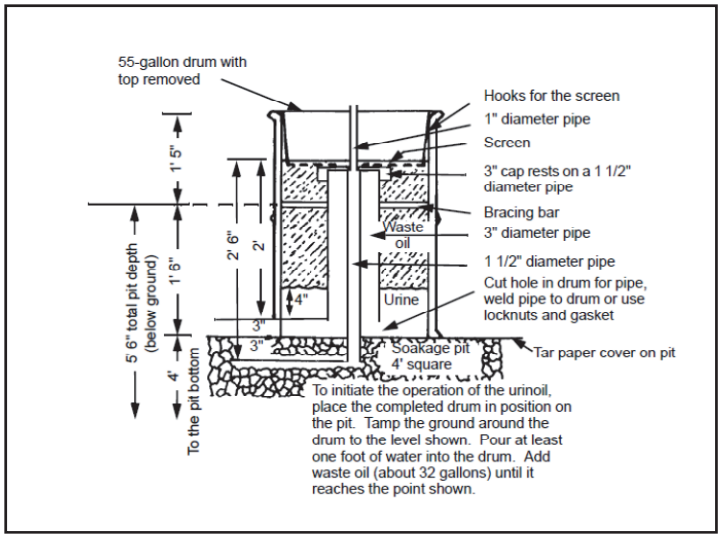

Figure 4-15. Urinoil

Maintenance

4-63. To ensure the proper operation of latrine facilities—

- Urinate in the trough or the pipe, not directly on the pit surface.
- Wash funnels and troughs daily with an antibacterial soap and water or disinfectant.
- Replace funnels when necessary.

- Prevent oil and grease from getting into the pit. It can cause clogging and can leech through the soil and contaminate the groundwater.

4-64. When a urine soakage pit is abandoned or becomes clogged, spray it with insecticide. Mound it over with a l-foot covering of compacted earth. Place a rectangular sign on the mound indicating the type of pit and date closed.

LATRINES IN AREAS WITH HIGH GROUNDWATER TABLES

4-65. The following latrines are used in areas where the groundwater table is shallow or impervious rock formations near the surface prevent digging a pit of adequate depth.

Burn-Out Latrine

4-66. The burn-out latrine is the preferred field-expedient method when the soil is hard, rocky, or frozen, making it difficult to dig. It is particularly suitable in jungles and other areas with high water tables. The design and construction of burn-out latrines will vary based on the availability of materials and construction capabilities (engineer units or contractors) and the desired degree of permanence that is suitable, based on expected duration.

4-67. To fulfill immediate requirements, the most basic burn-out latrine (see figure 4-16, page 4-25) can be constructed by placing a 55-gallon drum in the ground while leaving enough of the drum aboveground for a comfortable sitting height. The drum may be cut in half, making two latrines of less capacity. Place a wooden seat with a fly proof, self-closing lid on top of the drum. Weld handles to the sides of the drum, allowing two men to carry the drum with ease, because it must be moved before the contents are burned out. Have two sets of drums, if possible, so that one set can be used while the other set is being burned out. Encourage male personnel to urinate in a urine disposal facility (discussed in paragraph 4-57) rather than a burn-out latrine because more fuel is required for waste with a higher liquid content. Based on the expected duration of latrine use and the availability of construction materials and capabilities, an enclosed burn-out latrine can be constructed (see figure 4-17, page 4-25). Design details for a burn-out latrine are available in the Army's Theater Construction Management System.

Note. As a safety measure, drums should be filled with water before cutting them to prevent igniting any residual fumes, which could result in an explosion.

4-68. Burn out the latrine daily by adding sufficient fuel to incinerate the fecal matter. Do not use highly volatile fuel because of its explosive nature. Off-specification fuel should be used instead of vehicle fuel. A mixture of 1 quart of motor gasoline to 4 quarts of jet propulsion fuel grade 8 (JP-8) or diesel fuel is effective, but must be used with caution. Burn the contents again if they are not rendered dry and odorless in one burning. Any remaining ash should be buried.

Note. Highly volatile fuel such as motor gasoline should not be used alone because of its explosive nature. The burning location must be located downwind of the base camp.

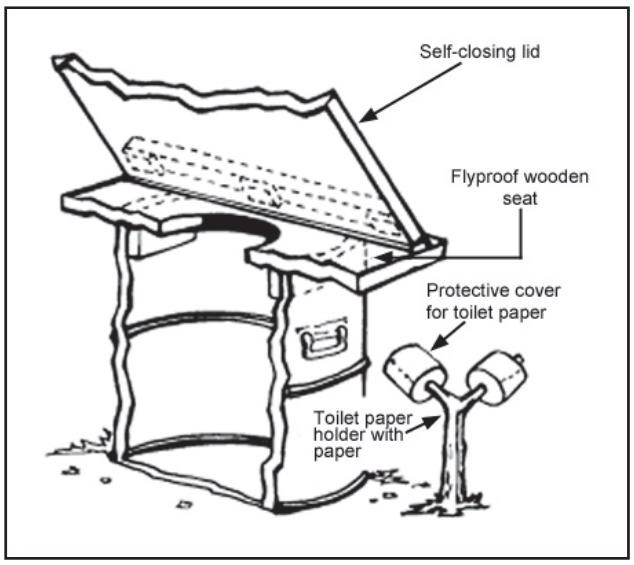

Figure 4-16. Burn-out latrine

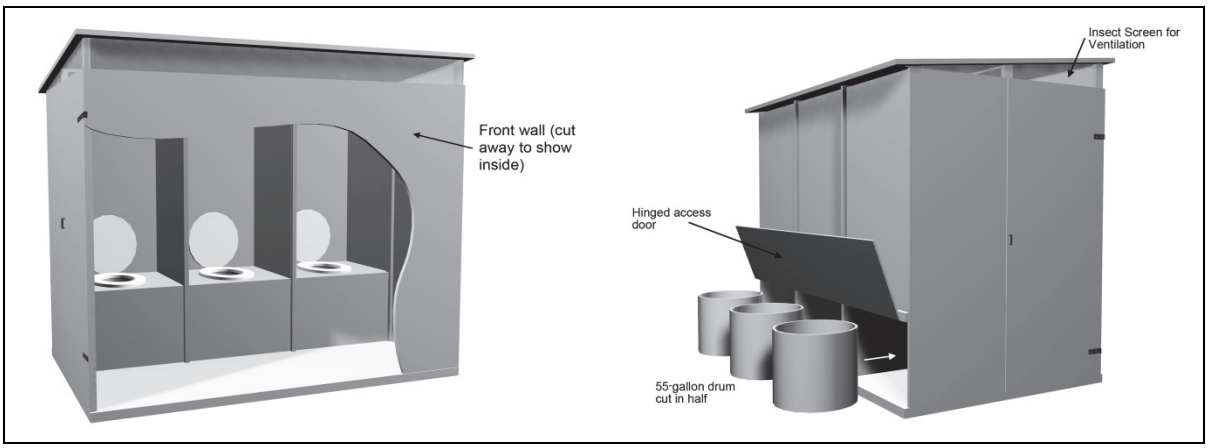

Figure 4-17. Enclosed burn-out latrine

Mound Latrine

4-69. A mound latrine is used when there is a high groundwater table or there are rock formations near the surface that prevent digging a deep pit. A dirt mound makes it possible to build a deep-pit latrine without extending into the groundwater or rock. Construct a mound of earth that is at least 6 feet wide and 12 feet long. It must be able to support a four-seat latrine box and be high enough to meet the pit depth requirement while allowing a 1-foot standoff between the base of the pit and the water or rock level. Break up or plow the area where the mound latrine is to be placed to aid in the seepage of liquids from the pit. If timber is available, build a crib of the desired height to enclose the pit and support the latrine box. Build the mound, and compact it in successive l-foot layers to the top of the crib as shown in figure 4-18, page 4-26. Roughen the surface of each layer before adding the next. If timber for a crib is unavailable, construct the mound to the desired height in l-foot layers as described, and dig the pit into the mound. It may be necessary to brace the walls with wood, sandbags, or other material to prevent them from collapsing. Fly proof and enclose a mound latrine the same as a deep-pit latrine (see paragraph 4-55). The size of the mound base depends primarily on the characteristics of the soil being used. The base can be expanded and/or steps can be provided to counter a steep slope. The mound latrine is closed as described in paragraph 4-51.

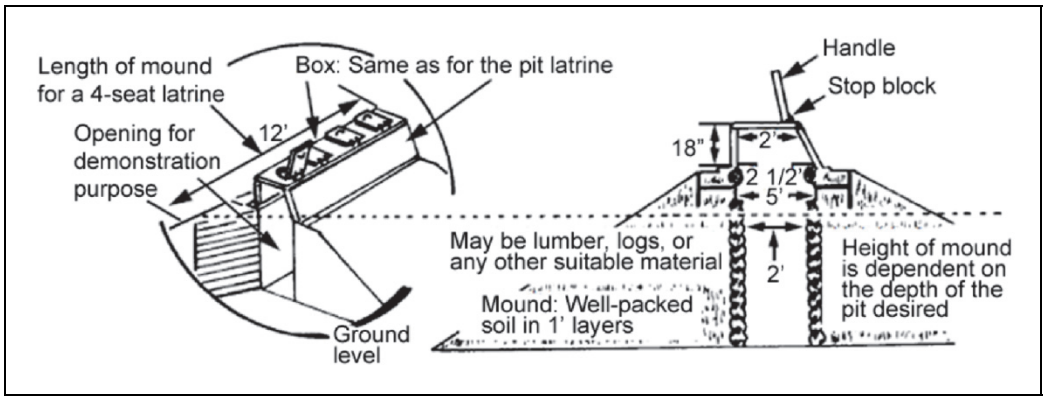

Figure 4-18. Mound latrine

Pail Latrine

4-70. A pail latrine (see figure 4-19) may be used when conditions (such as populated areas, rocky soil, and marshes) prevent other types of latrines from being built. A pail latrine is constructed using a four-seat latrine box that is modified by placing hinged doors on the rear of the box, adding a floor, and placing a pail under each seat. If the box is located in a building, it should be positioned to form part of an outer wall so that the rear door of the box can be opened from outside the building. The box should be fly proof, and the seats and rear doors should be self-closing. The floor of the box should be made with an impervious material (concrete, if possible) and should slope toward the rear enough to facilitate the rapid drainage of washing water. A urinal should also be installed in a male latrine and should have a drainpipe leading to a pail outside that is enclosed in a fly proof box. The waste in pails can be burned or hauled to a suitable area for burial or other means of proper disposal. Pails should be cleaned at least daily. Plastic bag liners for the pails may be used to reduce the risk of accidental spillage. The filled bags are tied at the top before disposal. When possible, bags should be double-bagged and placed into plastic transport barrels if available. The plastic bags are incinerated or buried along with the contents, but the plastic transport barrels should be cleaned and sanitized for reuse.

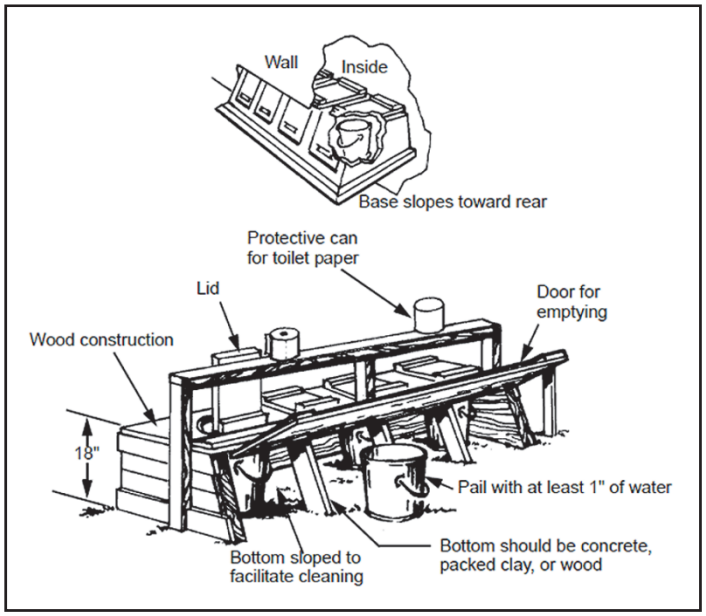

Figure 4-19. Pail latrine

TREATMENT SYSTEMS

4-71. Base camps with enduring capabilities will likely employ a waterborne sewerage system as described in FM 3-34.471. If this system cannot be connected to an existing treatment facility, a treatment method must be developed. The two primary types of treatment methods commonly used during contingency operations are sewage lagoons and septic systems. While both are acceptable, a septic system with a drain field is preferred.

Sewage Lagoons

4-72. Sewage lagoons (or oxidation ponds) provide a means of treating and disposing of black and gray water. However, they require a significant land area with proper soil types to reduce the risk of groundwater contamination, require adequate slope (1 to 2.5 percent) from the facilities to the lagoon to allow for water flow, and cannot be used in arctic regions. The effectiveness of a sewage lagoon will be determined by the duration and size of the mission. The length of use depends on the size of the sewage lagoon, the number of personnel using it, soil types, the water table, existing infrastructure, and the diversion of gray water. The odor produced from anaerobic digestion can be a concern if not properly designed. Lagoons should be located downwind at least one-quarter mile and as far away from populated areas as possible. The increased length of the sewer collection system, compounded by the possible need for automatic lift stations, significantly increases the material cost and construction effort required for a complete system. Absorption from sewage lagoons into the surrounding soil must be minimized through compaction and/or the use of a clay or membrane liner. See table 4-8 for relative absorption rates in sewage lagoons. Most engineering units can construct simple holding ponds, but actual lagoons require civil engineering expertise that may be available through higher headquarters or reachback to USACE.

Table 4-8. Relative absorption rates in sewage lagoons

Time Required for Water Level to Drop 1 inch in a Test Hole	*Relative Absorption Rate*	*Type of Soil*
0–3 minutes	Rapid	Coarse sand or gravel[1]
3–5 minutes	Medium	Fine sand or sandy loam[1]
5–30 minutes	Slow	Clay, loam, or clay with sand
30–60 minutes	Semi-impervious	Dense clay
>60 minutes	Impervious	Hardpan or rock
[1]Soil is not suited for lagoons unless water retention is assisted by the installation of a waterproofing skin at the lagoon bottom.		

4-73. For rough planning estimates, a camp with up to 1,000 personnel will require approximately 2 acres of lagoon space, 2,000 personnel will require approximately 3 acres, and 4,000 personnel will require approximately 6 acres. The amount of water coming into the lagoon system depends on the many practices occurring within the base. For FOBs with showers, toilets, a laundry, washracks, and dining facility activities, a first approximation is to use 100 gallons per day. To calculate the gallons of water used per day, add a reasonable "safety" factor (such as 10 to 50 percent) to account for the transfer of authority, surge requirements, visitors, or shutdowns. Then use a residence time of 25 days to calculate lagoon volume. In hot weather, there will be a significant evaporation of the water; but in cold weather, the water will remain in the lagoons longer. These estimates provide data for a rough order of magnitude workload and time required for heavy equipment use on-site. Some FOBs may have pumper trucks dumping sewage into the lagoon, as opposed to piping from the various support activities. It is best to design lagoons in parallel with two to three consecutive ponds that the water flows through before being discharged. A sand filter area or a wetland zone can be incorporated at the effluent end to provide further particulate filtering. The naturally treated effluent water generated from this process can be reclaimed for agriculture or reused on base.

4-74. Sewage lagoons are suitable technology to be turned over to most HN. They are easy to maintain with minimal equipment or trained operators. More sophisticated technology, while perhaps more efficient, has a greater risk of failing without trained and efficient operators.

Septic System With Drain Field

4-75. A septic system with drain field (or leach field) allows for black and gray water treatment and disposal. Designing a septic system requires civil engineering expertise and should only be conducted by a licensed, experienced engineer who is familiar with the various alternative systems and components that may be available through contracting. The material contained in this section is meant to provide waste management planners with an overview of septic systems to help them understand some of the requirements and options that may be considered.

Septic Tank

4-76. A septic tank (see figure 4-20) separates and retains most of the solids in the sewage flow. The solids settle to the bottom of the tank and undergo anaerobic digestion (primary treatment). The preferred method of installation is to use a precast concrete or fiberglass septic tank that is sized for the anticipated flow of black water (based on the amount of water being supplied to the system), or a concrete one may be constructed in place. Septic tanks must also be emptied every 3 to 5 years or sooner if more than 1 foot of solids accumulates at the bottom.

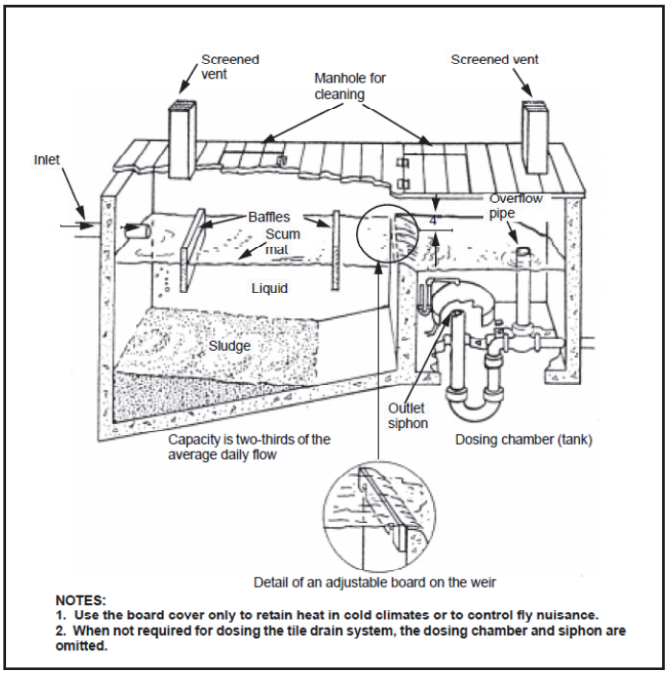

Figure 4-20. Septic tank

4-77. A pumped septic system (or dosing tank) may be required when a septic tank will be too deep to accommodate a shallow drain field or when wastewater must be discharged to the drain field at a rate required by treatment. A dosing tank is a small, intermediate tank that holds wastewater so that it can be treated (with liquid bleach or perchlorate tablets) and/or released to the drain field in doses.

Drain Field

4-78. The effluent from a septic tank is dispersed into the surrounding soil (drain field or leach field) through a single, perforated polyvinyl chloride or high-density polyethylene pipe (lateral line) or through a number of lateral lines (see table 4-9, page 4-29). As with lagoons, a drain field requires a significant amount of area. Although it does not completely remove the land area for use, it does limit traffic to that which will not crush or damage the pipe system.

Table 4-9. Soil absorption rates for lateral lines

Time Required for Water Level to Fall 1 inch (in minutes)	*Absorption (GPD/ square foot of trench bottom in the field)*
1 minute	4.0
2 minutes	3.2
5 minutes	2.4
10 minutes	1.7
30 minutes	0.8
60 minutes	0.6
Legend: GPD gallons per day	

4-79. The following conditions are important for a lateral drain field to properly function:

- The groundwater must be well below the level of the drain field.
- The soil in the absorption field must be able to accept the volume of black water being generated.
- There is at least 300 feet between the drain field and any existing source of drinking water, and the risks of contaminating that water source (particularly shallow or driven wells in the vicinity) are negligible.

4-80. Before designing a subsurface drainage system, a percolation test should be performed using the following steps (see figure 4-21, page 4-30):

- **Step 1.** Dig at least six test holes, 1 foot square, to a depth equal to the planned drainage bed.
- **Step 2.** Place a 2-inch layer of gravel in the bottom of the holes, and fill the holes with water.
- **Step 3.** Let the test holes stand overnight if the soil is tight or has heavy clay content. If the soil is sandy and the water disappears rapidly, no soaking period is needed. Pour water into the holes to a depth of 6 inches above the gravel. The batter board acts as a reference line, and a ruler should be used to record the level of water in the hole below the batter board.
- **Step 4.** Measure the water every 10 minutes over a 30-minute period. The drop in water level during the final 10 minutes is used to find the percolation rate of the soil.
  - If the soil takes 30 minutes to absorb 1 inch of water, 4 feet of drainage is needed for each gallon of liquid.
  - If a test hole needs more than 30 minutes to absorb 1 inch of water, the soil is not suitable for a subsurface drainage system. Alternatives to consider include a chamber system, a mound system, an evaporation-transpiration bed, or an alternative means for secondary treatment (such as Multi-Flo aeration units) must be designed.

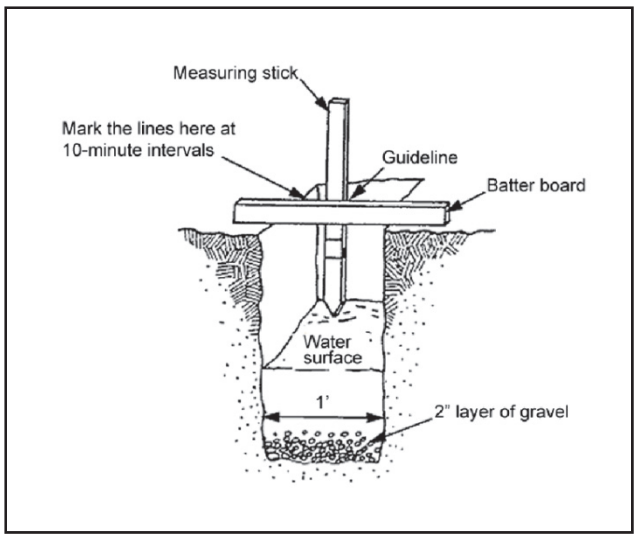

Figure 4-21. Soil percolation test

4-81. Based on the results of the percolation test, the number of lateral lines required is determined, based on the application rates in table 4-9. The length of the lateral lines and the details of the filter trench are based on the soil characteristics. To determine the length of piping for lateral lines, waste management planners perform the following steps:

- **Step 1.** Determine the soil absorption rate using table 4-9.
- **Step 2.** Calculate the area of trench bottom required for absorption by dividing the total estimated effluent by the absorption rate of the soil. Round up to the nearest 10 feet.
- **Step 3.** Calculate the length of trench and pipe needed by dividing the area of trench bottom required (step 2) by the width of the trench in feet. Round up to the nearest 10 feet. Generally, the length of lateral lines should not exceed 75 feet.

4-82. The typical drain field consists of perforated pipes that are buried in gravel-filled trenches. Trenches that are 24 inches wide or more are the most economical. If a trenching machine is available, base the design on the width of the trench excavated by the machine. The distance between laterals is approximately triple the width of the trench. The minimum width of trenches on the basis of soil is as follows:

- Sand and sandy loam: 1 foot.
- Loam: 2 feet.
- Sand and clay mixture: 2 feet.
- Clay with some gravel: 3 feet.

4-83. In areas where freezing temperatures occur, the pipes must be placed below the frost line (except for subsurface tile systems). The following minimum depth measurements apply for wastewater pipe:

- Pedestrian areas: 6 inches.
- Light vehicles (less than 2 1/2 tons): 24 inches.
- Heavy vehicles (more than 2 1/2 tons): 48 inches.

4-84. The size of pipe needed is based on the flow rate as shown in table 4-10, page 4-31. Pipe is laid on a 6-inch bed of screened, coarse gravel (3/4 to 2 1/2 inch), with 3 inches of gravel placed around and over the pipe. The pipe is commonly laid at a slope of about 0.5 feet per 100 feet when taking the discharge directly from the septic tank and 0.3 feet per 100 feet when a dosing tank is used ahead of the field to ensure that the effluent is equally distributed and does not rush to the end of the pipe. Laterals may also need to be connected to a distribution box to ensure equitable flow to each line. Before the backfill is placed on top of the gravel, a geotextile material or a 3-inch layer of medium screened gravel over the coarse gravel and 3 inches of fine screened gravel over the medium gravel is placed to prevent the backfilled soil from filling the voids in the gravel around the pipe. After the drain field is constructed, fencing or markers should be

placed around the perimeter to prevent vehicle traffic from crushing the pipes. Planting grass over the lines helps remove the moisture and keep the soil open.

Table 4-10. Pipe sizes

Flow Rate (gallons per minute)	*Pipe Size (inches)*
<300	6
300–700	8
700–1250	10
1250–2200	12

4-85. Consider packaged, modular, scalable, deployable wastewater treatment facilities for camps that will be in place for some period of time with a high probability of not being turned over to the HN after use. Three treatment strategies currently available that generally meet the Army needs are sequencing batch reactor, flow through, and fixed film.

4-86. Sequencing batch reactors treat wastewater in batches, where microorganisms are allowed to proliferate and settle the solids. The process occurs in five stages: fill, react, settle, decant, and idle (see figure 4-22). The time required for each phase depends on the strength of the influent or biological oxygen demand and the standards that must be met by the treatment plant. The treatment standards are based on theater SOPs or HN regulations. These systems come in containerized components that are modular, scalable, and deployable. On large bases, this system process can be constructed with large concrete basins to treat millions of gallons of wastewater a day. The containerized models can be deployed to remote locations where space could be an issue or our forces will leave and redeploy with the system. This system, typically operated under contract, is not conducive to transfer due to the complex nature of operations.

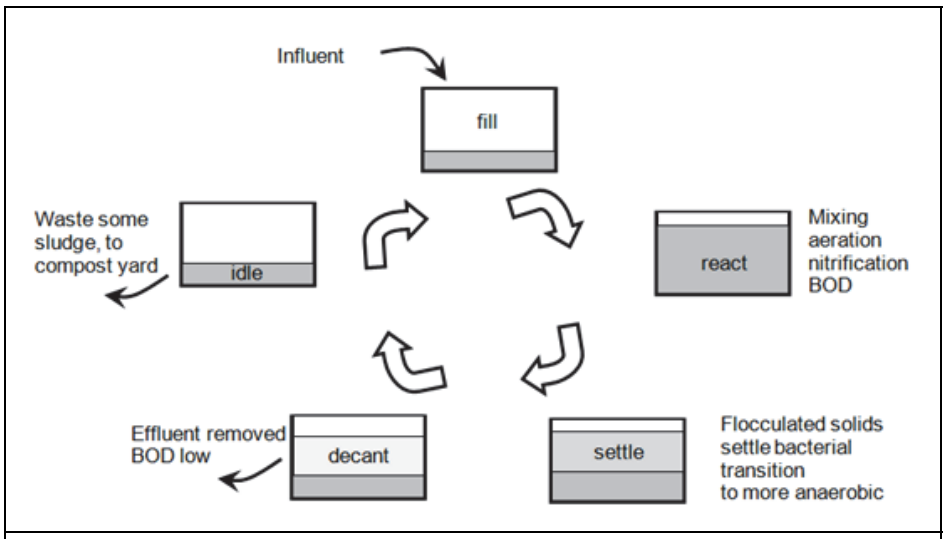

Legend:
BOD biochemical oxygen demand

Figure 4-22. Stages of wastewater treatment

4-87. The effluent can be discharged into an additional polishing system, such as a reed bed, and used to recycle the water for nonpotable or agriculture purposes. When the water is reused on the camp, it must be disinfected and kept from other nonpotable-water systems. The most effective use of this water is in the purple-pipe closed loop system. This will reduce the amount of *new* water the camp needs to acquire. This type of reuse reduces the stress on HN resources, reduces potential conflicts with local nationals, and brings our camps closer to self sustainability.

4-88. The flow through system uses a process where waste flows through one end of the treatment box and cleaned effluent leaves from the other end. There have been significant improvements in process capabilities over the last few years. The one advantage these systems have is an effective anaerobic zone that denitrifies the water, providing the potential for many reuse strategies. This system comes in modular, scalable, deployable containers. The containerized system can be deployed to remote locations where space can be an issue or our forces will leave and redeploy with the system. This system, typically operated under contract, is not conducive to transfer due to the complex nature of operations.

4-89. The fixed film system uses a media on which microorganisms can live. Wastewater is reduced when it passes over or around the organisms. Sand is a typical medium. The rotating biological contactor (see figure 4-23) is a device that provides a "home" for microbes on large rotating wheels that move through a basin in which the wastewater is flowing. The microorganisms get oxygen from the air and some small amount absorbed in the water. The containerized system uses specialized communities of microorganisms that live in small plastic discs with lots of internal projections. The small projections promote microenvironments where anaerobic bacteria can live in an oxygenated system. These systems are not suited for deployed situations. Acquiring the necessary amount and required particle size of sand is often an issue in remote locations. The rotating biological contactor is very sensitive to temperature changes, and is best suited for tropical or subtropical areas not temperate and desert climates. There is a container system now available that requires constant recolonization by several cultured microorganisms (expensive). These systems require more care than the systems discussed above, and are not recommended to be used as the typical deployed wastewater treatment system.

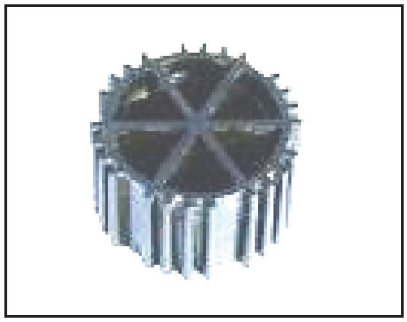

Figure 4-23. Example of a disc used in fixed film systems

4-90. Biogas generation is the anaerobic methanogenic digestion of organic matter. This method has been researched as a viable alternative for mixed waste disposal with the production of methane for heating or producing electricity. This digestion process requires some sophisticated engineering and construction procedures, but is within the scope of service engineers with support from USACE, other organizations, or contractors.

BASE CAMP TRANSFER AND CLOSURE

4-91. When alerted to transfer or close a base camp, planners should contact the USACE or PVNTMED team that is providing area support for assistance. When closing base camps, latrines, soakage pits, and septic systems must be closed and marked. While simple methods generally involve only covering with earth, agreements with the HN may require more detailed methods and some form of long-term monitoring to detect potential groundwater contamination. In the absence of formal guidance, best management practices must be used. This may entail enlisting environmental experts to ensure the best possible solutions.

4-92. When abandoning a septic tank, the following procedures are usually applied, though local requirements may vary:

- Pump out the septic tank, and dispose of the contents as appropriate.
- Disconnect the sanitary line from the septic tank.
- Remove or crush the top of the tank.

- Break the tank bottom open so that it will not hold surface runoff and form an unwanted reservoir.
- Fill in the septic tank with stone, rubble, or soil to prevent a future collapse hazard once any required inspections have been performed.
- Mark the location with a rectangular sign, indicating the contents of the filled-in tank, the date it was filled, and the unit that filled it (if the situation allows). Report the 8-digit grid coordinates for the tank location to higher headquarters so that future site work or building plans can anticipate or avoid the buried obstruction.

This page intentionally left blank.

Chapter 5

Hazardous and Special Waste

This chapter addresses HW and special waste and how to develop a plan for managing it. It is a continuation of the discussion presented in chapter 2.

OVERVIEW

5-1. *Hazardous waste* is any solid waste that is either listed as such in federal law or exhibits any of the four hazardous characteristics—ignitability, corrosivity, reactivity, or toxicity. (*Environmental Considerations*) Examples of common HW include used solvents, waste fuel filters, contaminated fuel, paint waste, nonpunctured aerosol cans, and petroleum contaminated soil from fuel spills. The handling and disposal of some materials according to theater SOPs will allow for on-site remediation or reuse. For example, petroleum contaminated soil should be bioremediated on-site and contaminated fuels and waste oils can be used as accelerants in incinerators if the proper tanks are installed. All commanders need to take steps to reduce the amount of material that enters the HW/hazmat waste stream by applying some simple logistical practices. For example, establishing a consolidated storage area (sometimes referred to as a hazardous material pharmacy where hazmat can be accepted and reissued to prevent them from becoming HW. Recycling used oil into vehicles, using fuel-oil blending technology, should be considered for all maintenance operations. Do not designate usable hazmat as HW to clean up a motor pool or work space.

5-2. *Hazardous material* is any substance that has a human health hazard associated with it. Special storage, use, handling, and shipment safety procedures and protocols must be followed to help protect against accidental exposure. Hazardous materials are specifically identified under federal law. (*Environmental Considerations*). Hazmat becomes HW if it can no longer be used for its intended purpose due to the expiration date, contamination, or spillage. Where possible, it is advisable to substitute nonhazardous materials for hazmat. Containers of hazmat that have less than one year remaining on their shelf life should not be shipped into contingency locations. Hazmat may also become HW through the process in which it is used if the generated waste is characterized as hazardous. The transnational shipment of HW is a significant administrative problem in contingency operations today. The need to minimize the amount of HW that needs to be shipped across international borders is critical. Do not automatically classify hazmat with an expired shelf life as HW unless it represents an immediate hazard to human health and/or the environment. The first action when hazmat with an expired shelf life is encountered is to determine if the shelf life can be administratively extended. This can be determined by working through the unit supply specialist, contacting the logistic office, or using the military quality control storage standard and the quality status list which can both be found on the DOD Shelf-Life Program Intranet at <https://headquarters.dla.mil/j-3/shelflife/>.

5-3. ***Special waste* is any waste material that does not meet the criteria for hazardous waste, but which still requires special handling or disposal procedures due to its physical, chemical, or biological properties that pose a threat to human health, equipment, property, or the environment.** Many of the items listed below can be recycled or cleaned for continued use by specialized equipment. Every effort needs to be made to use best practices to reduce the amount of material entering the HW stream. Some examples of special waste that units may have to contend with include the following:

- Used oil.
- Used antifreeze.
- Materials that contain asbestos.
- Sludge resulting from wastewater treatment.
- Petroleum contaminated soil.
- Incinerator ash.

- Debris and residue from spill cleanup or remediation efforts.

HW AND SPECIAL WASTE MANAGEMENT SYSTEM

5-4. The components of a HW and special waste management system are the same as a nonhazardous SW system. These components are segregation, collection, transportation, recovery, and disposal.

SEGREGATION

5-5. HW and special waste must remain segregated from other waste streams, which begins with proper segregation at the point of generation. Proper segregation at the point of generation eases the overall management of HW and special waste and allows for easier waste characterization and disposal. Allowing HW and special waste to mix with nonhazardous waste generates more HW and special waste, complicates turn-in procedures, increases disposal costs, increases potential health risks, and could result in dangerous chemical reactions. Once segregated, waste must remain segregated while it is being accumulated to prevent incompatible materials from coming into contact in the event of a leak or spill. The segregation of waste within accumulation points is discussed in paragraph 5-20.

COLLECTION

5-6. HW and special waste are collected at or near the point of generation and is temporarily accumulated in a HWAP setup near the work site. Accumulated waste is then transferred to a larger HWAP within the same unit element or directly to a hazardous waste storage area (HWSA) established within the theater of operations. The HWSA is the last stop within the theater of operations where HW and special waste are accumulated in preparation for treatment or disposal. The HWSA is generally under the direct control of the Defense Reutilization and Marketing Office or a qualified contractor.

5-7. The waste generator is responsible for the proper accumulation, maintenance, and housekeeping of the unit HWAP. The waste generator must understand the appropriate procedures before establishing a HWAP to ensure that—

- Waste streams are not mixed.
- No waste other than the specified waste for that waste stream (approved for the container) is placed in the collection container.
- All leaks, spills, and other releases are responded to appropriately, recorded, and reported as directed.
- Small leaks or spills around the container openings are cleaned up with absorbent material (see table 5-1, page 5-3) or rags and then properly packaged, labeled, and disposed of as HW as required.
- Each HW container should be segregated, based on its hazardous characteristics (reactive, flammable, corrosive, or toxic) as described in paragraph 5-20.
- Containers are not overfilled, to allow for expansion, as described in paragraph 5-26.
- Containers are opened, handled, filled, emptied, and stored in a manner that avoids rupture or leakage.

5-8. The G-4/S-4 coordinates the movement of HW and special waste between HWAPs and to the HWSA. The collection and/or transfer of HW and special waste within the unit is normally performed in conjunction with the issue and turn-in of hazmat as part of resupply operations to minimize transportation requirements.

Table 5-1. Stock numbers for specific absorbents

NSN	*Item Description*
7930-00-269-1272	Absorbent, oil and water (44-pound bag)
5640-00-801-4176	Insulation, thermal, vermiculite (bag)
4235-01-423-1466	Absorbent, loose, 1-cubic-foot bag (4 each per box)
4235-01-423-0711	Absorbent, loose, 2-cubic-foot bag (3 each per case)
4235-01-423-1463	Pads, 18 by 18 by 3 inches (30 each per box)
4235-01-423-1465	Socks, 4 inches by 8 feet (10 each per box)
4235-01-423-1467	Socks, 2 inches by 10 feet (20 each per box)
4235-01-423-2787	Boom, with clamps, 10 inches by 10 feet
6850-01-420-3082	Micro-Blaze remediation tool
Legend: NSN national stock number	

PLANNING CONSIDERATIONS FOR HWAPS AND HWSAS

5-9. The location, size, and number of HWAPs within base camps and HWSAs within the theater will depend on the amount of, and location where, HW and special waste is being generated; the availability of qualified contractors; and safety, security, terrain, and environmental considerations identified during the MDMP.

5-10. Planners must consider the sensitivity and vulnerability of adjacent areas (such as billeting, work areas, and ammunition supply points) and locate HWAPs and HWSAs at least 100 meters from any drinking water source and down gradient and downwind from troop billeting and dining facility operations. HWAPs and HWSAs should be located on generally flat and level ground and away from low-lying areas that are prone to flooding during heavy rains. They should be located where access is controlled or limited and where accidental spills and discharges will not flow into drains or runoff areas. They should also be near roadways to accommodate transportation vehicle access. Size is based on the anticipated accumulation and storage needs that are derived by analyzing the types and functions of units, types and quantities of hazmat within unit inventories, and estimated consumption rates. HWAPs and HWSAs must be large enough to provide ample aisle space that allows expedient and unobstructed movement of personnel, material handling equipment, firefighting equipment, decontamination equipment, and spill control equipment.

5-11. The number of HWAPs and HWSAs will vary. In small FOBs, one HWAP will generally suffice, depending on how much waste can be accumulated, and based on any limits established for the theater of operations. In larger base camps with multiple large units, more than one HWAP may be needed. In these situations, the base camp commander should establish procedures to consolidate the shipments of HW and special waste from the base camp HWAP to the HWSA.

5-12. HWAPs and HWSAs must be designed, constructed, maintained, and operated to minimize the risk of a fire, explosion, or any unplanned release of HW or its constituents into the air, soil, groundwater, or surface water that could threaten human health or the environment. Procedures and controls for managing HWAPs and HWSAs should be contained in SOPs, plans, and orders.

5-13. As long as the requirements for proper storage are met, there are no limits on volume or time that HW and special waste can be stored in a HWSA. However, waste management planners must consider that the volume of stored HW proportionately increases the potential for health risks and environmental liabilities if a catastrophic event occurs.

5-14. Only waste that is properly identified, documented, marked, and packaged is allowed into the HWSA. Any unknown waste discovered must be sampled and characterized before it is accepted. The following procedures should be performed when waste is turned in to a HWSA:

- Complete all appropriate turn-in documentation, including Defense Reutilization and Marketing Service (DRMS) Form 1930 (*Hazardous Waste Profile Sheet),* Department of Defense (DD) Form 1348-1A (*Issue Release/Receipt Document),* and a copy of the MSDS (if applicable) for each type of waste.
- Ensure that the waste is properly segregated and packaged in appropriate containers that are properly marked (see table 5-2 for a list of containers).
- Ensure that the HWSA operator properly logs all received material into the HWSA and that records of HW turn-ins are kept for 3 years.

Table 5-2. Stock numbers for specific containers

NSN	*Item Description*
8125-00-174-0852	Bottle, plastic, 1-gallon (polyethylene)
8125-00-731-6016	Battle, plastic, 13-gallon
8110-00-254-5719	Drum, steel, 1-gallon
8100-00-128-6819	Drum, steel, 1-gallon (17C)*
8100-00-254-5722	Drum, steel, 4-gallon
8110-00-282-2520	Drum, steel, 5-gallon (17C)*
8110-00-254-5713	Drum, steel, 6-gallon (with ring)*
8110-00-366-6809	Drum, steel, 30-gallon (17C)*
8110-00-030-7780	Drum, steel, 50-gallon (17C)*[1]
8110-01-282-7615	Drum, polyethylene, 55-gallon*
8110-01-101-4055	Drum, steel, disposal, 85-gallon (no lining)*
8110-01-101-4056	Drum, steel, recovery, 85-gallon (epoxy phenolic lining)*
8110-01-343-1697	Drum, plastic, 55-gallon*[2]
8110-01-150-0677	Drum, plastic, 55-gallon*[3]
8110-00-292-9783	Drum, steel, 55-gallon[4]

Legend:
NSN national stock number
POL petroleum, oils, and lubricants

*Open-top containers
[1]For POL contaminated solids
[2]For corrosive contaminated solids
[3]For corrosives or broken batteries
[4]For contaminated POL products

5-15. As the primary staff integrator for the environmental program, which includes waste management, the engineer staff officer is responsible for developing and coordinating the necessary information that subordinate units will need to establish and operate HWAPs and/or HWSAs. At the company level and in units that do not have an engineer staff officer, this responsibility will likely be assigned to the environmental officer. At a minimum, SOPs and operation plans and orders must collectively address the following areas:

- Training requirements for personnel managing and operating HWAPs and HWSAs (see paragraph 5-59).
- Protection measures.
- Secondary containment.
- Segregation.
- Emergency preparedness.
- Inspections.
- Recordkeeping.

- Container requirements, to include marking and labeling.
- Safety measures when handling HW and special waste.

Protection

5-16. HWAPs and HWSAs must be adequately covered and protected to keep rain out of accumulation and storage areas (including the secondary containment) and prevent materials from being exposed to the sun. Tarps may be used as a temporary expedient method as long as they remain secure during adverse weather.

5-17. Because of the potential hazards, access to the accumulation site must be controlled by 24-hour monitoring or barriers that will restrict entry. HWAP and HWSA site managers should use control measures (such as signs, rope, yellow and black cautionary tape, and fencing) to restrict access and control activities in and around the sites. Each site must be properly designated as a HWAP or HWSA with signs that are posted on all sides that state "HAZARDOUS WASTE ACCUMULATION POINT (or HAZARDOUS WASTE STORAGE AREA)–DANGER UNAUTHORIZED PERSONNEL KEEP OUT" and "NO SMOKING" in English and any other language that is prominent for the operational area. Consideration must also be made to ensure that barriers and fencing will not obstruct the access of material handling equipment, transportation, and emergency vehicles.

Secondary Containment

5-18. Secondary containment is required to prevent the spread of spills for all waste containers. Examples of secondary containment include, but are not limited to, plastic tubs; sumps; concrete pads with curbs to prevent runoff; spill control pallets; and plastic-lined pits, trenches, dikes, or berms. As a field-expedient method, secondary containment can also be achieved by placing containers of waste on a large plastic tarp, with filled sandbags stacked around the perimeter, the edges of the tarp draped over the top of the sandbags and the tarp folded back into the accumulation or storage area. Whatever method is used, secondary containment must have the capacity to contain 10 percent of the total volume being stored or 110 percent of the volume of the largest container, whichever is greater. Overhead cover (such as a tarp or a roof) should also be used to prevent rainwater from collecting in secondary containment devices and to prevent containers from rusting.

5-19. As the theater matures and base camp construction standards become more enduring, HWAPs and HWSAs should be improved. This includes emplacing concrete hardstands with built-in containment features or installing better overhead and side cover to protect against the weather and unauthorized entry.

Segregation

5-20. HW and special waste must be segregated within HWAPs and HWSAs to prevent incompatible waste from coming into contact in the event of a leak or spill and producing an adverse chemical reaction or toxic fumes. (See *Storage and Handling of Hazardous Materials* for extensive information on storage compatibility considerations.) HW is generally segregated into four major sections: reactives, flammables, corrosives, and toxics (see table 5-3, page 5-6). Further segregation may be required, based on the compatibility of individual materials as indicated on MSDSs or as determined by waste characterization. For example, acids must be separated from bases, and compressed gas cylinders cannot be stored with special waste that is flammable.

Table 5-3. Storage segregation chart

Reactives	*Flammables*	*Corrosives*	*Toxics*
Chlorination kits Decontaminants Lithium (batteries) Magnesium Sodium Zinc powder	Chemical agent-resistant coating–toxic Class III and V waste Cleaning compounds Deicing agents Fuels Lacquers/varnishes Paints Paint thinners Parts cleaners Sealants Solvents Waste fuels Windshield cleaners	Battery acids Carbon removers Degreasers Paint strippers Rust removers Radiator leak compounds Weapons cleaners	Grease Insect repellants Lubricants Oils Oil-contaminated solids Paint primers

5-21. Each storage section should be separated by a distance of 6 feet or by a physical barrier (such as a berm or T walls). Signs with "NO SMOKING WITHIN 50 FEET" should be prominently displayed, and all metal containers should be grounded. The following general incompatibilities should be avoided through segregation:

- Reactives from flammables.
- Acids from bases.
- Corrosives from flammables.
- Oxidizers from everything.
- Organic reactives from inorganic reactives.

Emergency Preparedness

5-22. Each HWAP and HWSA must have a posted spill response plan that describes the proper actions to take (to include immediate notification, reporting requirements, and points of contact) and the proper use of the appropriate equipment to respond to any on-site emergency. The spill response plan and use of equipment should be rehearsed (for example, simulating a spill incident) to ensure that personnel working within HWAPs and HWSAs understand the procedures. Each HWAP and HWSA must have the appropriate emergency equipment, to include—

- Spill kits compatible with the types of HW on-site that will assist with containment and cleanup. At a minimum, a HWAP should have approximately 15 pounds of absorbent, two nonsparking shovels, two brooms, and plastic bags to hold contaminated absorbent. HWSAs will likely store a greater amount of HW and will have a need for larger quantities of spill kit material.
- An ABC-type fire extinguisher of the appropriate size for the operation.
- Potable water for eye washing and decontamination.
- Four sets of appropriate PPE (two for cleanup and two for a backup team).
- An emergency communication or alarm device.

Inspections

5-23. Environmental officers will monitor all HWAPs within their unit and assigned areas according to environmental SOP for the local area of operations. They will implement procedures for routine inspections of HWAPs to ensure that all requirements are being met and that containers remain in good condition. Any deficiencies noted should be immediately corrected. A root cause analysis should be performed on instances of noncompliance to identify any negative trends and to prevent them from recurring. A record of inspections should be maintained with the unit level environmental records to include the date and time of inspection, the name of the inspector, a notation of the observations made, and the date and nature of corrective actions that were taken. HWSAs will be monitored and inspected by the COR according to the contract requirements.

Recordkeeping

5-24. An accurate inventory must be maintained, to include tracking the duration of storage for all HW and special waste. A log should be kept to track the type and quantity of waste received, the date it was received, and the identity of the unit that generated it. A record is maintained for each container that tracks the type and amount of material that is added, and it accompanies the container when it is transferred. This record helps in the verification of waste characterization before disposal and prevents the need for sampling containers of unknown waste, which can become very expensive and add to the total cost for disposal. The manager for each HWAP/HWSA is responsible for filling out the appropriate turn-in documentation (such as DD Form 1348-1A and DRMS Form 1930) and any other applicable local forms. All HW management records must be maintained for at least 3 years or as determined by the combatant commander. Upon base camp transfer or the transfer of authority, the incoming unit must be provided the necessary records. Eight-digit grid coordinates and inventories of the accumulation areas are reported to higher headquarters in the event that the unit must rapidly evacuate the area. The inventories should be loaded to DOEHRS–Environmental Health.

Container Requirements

5-25. When possible, HW and special waste will be collected in steel or polyethylene containers that meet United Nations requirements for storage and transportation. Table 5-2 provides ordering information for various containers. The best container is often the original container that the material was shipped in, as long as it is capable of being closed. In general, steel drums should be used for toxic and flammable waste and polyethylene should be used for corrosive acids, bases, and oxidizers. If the original container or United Nations-approved containers are unavailable, any container that is in good condition (free from severe rusting, bulging, dents, or structural defects) and compatible with the waste stream may be used. When containers are reused, any labels or markings that no longer apply to the new content should be removed or covered with spray paint and the containers should be relabeled as appropriate.

5-26. Containers used to collect HW and special waste must be kept closed when not adding or removing waste. When filling a container with liquid waste, ensure that adequate headspace remains to allow for the expansion of material. Allow approximately 4 to 5 inches in a 55-gallon drum; 2 to 3 inches in a 5-gallon container; and 1 inch in a 1-gallon container. For extremely hot climates (desert environments), these headspace allowances should be doubled. Funnels or other flow control devices should be used to minimize spills when transferring liquids to or from containers. However, funnels must be removed (unless self-closing funnels are used) and containers closed after the transfer is complete. Additionally, only nonsparking tools and grounded, metal containers should be used to containerize ignitable waste and corrosive waste should only be collected in plastic or plastic-lined containers.

5-27. When necessary, HW and special waste may be held in small containers in work areas. The container must be labeled with the chemical name and the hazards and used only for a particular waste stream. The container must be emptied into the larger container at the HWAP at the end of each work shift.

Marking

5-28. As shown in figure 5-1, page 5-8, each container of waste is marked or labeled with its contents (for example, “used oil” or “contaminated soil”), the hazards of the material (such as “ignitable”), and the generating unit designation or unit identification code. The container should be marked with the date that waste is actually placed in the container to indicate when accumulation began. It should be dated again when the container is transferred to the HWSA or as directed by the theater environmental SOP. Labeling should be applied with an indelible paint pen or stencils. All lettering should be at least one inch in size and in a color that contrasts with the color of the container so that it is visible from a distance. The containers should be arranged in the accumulation area so that the markings are facing outward for ease of viewing.

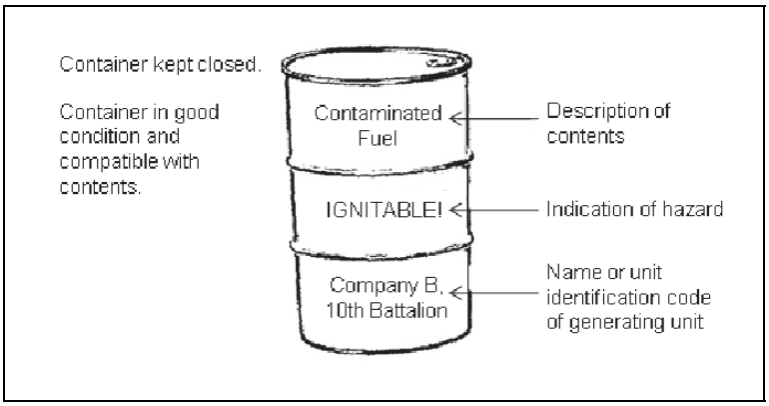

Figure 5-1. Marking requirements for HW containers

Handling

5-29. The most important aspect of hazmat, HW, and special waste handling is correctly identifying the hazards associated with each individual chemical so that necessary measures can be taken to minimize the risks to Soldiers and the environment. MSDSs provide critical information, such as the hazardous characteristics of the substance, the appropriate PPE, spill response procedures, signs and symptoms of overexposure, and first aid procedures. MSDSs can be obtained through unit supply channels and are required to be maintained at hazmat storage areas, refueling sites, maintenance facilities, and medical treatment facilities for every hazmat stored and used on-site. It is important to note that MSDSs are material, and manufacturer-specific, which means that each brand name of a chemical has a different MSDS. The date of manufacture is also important when looking for the appropriate MSDS because manufacturers may periodically reformulate chemicals and issue a new MSDS. The MSDS should accompany any hazmat that is received through the supply system. If an MSDS is missing, it can normally be obtained in several ways, such as downloading from the manufacturer's Web site, submitting a request directly to the manufacturer via e-mail, using the Hazardous Materials Information Resource System (HMIRS) if the product has an NSN, or requesting assistance through the environmental officer. Binders containing MSDSs for all hazmat stored or used on-site are required to be maintained and readily available to personnel on-site for familiarization and in the case of a spill or fire. MSDSs should be updated at least every 5 years. MSDSs are discussed in further detail in appendix E.

5-30. HW and special waste will generally not have an MSDS unless the waste consists of an unused hazmat or a hazmat with an expired shelf life or it is a "pure" waste that only contains the hazmat and was not contaminated or chemically altered during its use. MSDS may provide general information regarding the chemical properties of the constituents of a waste material; however, HW will require laboratory analysis for definitive waste characterization. The waste generator's knowledge may be used for characterization when the waste material has been analyzed previously, occurs often, and is generated through the same process. If a process or products used in the process change, the waste stream must be reanalyzed. The environmental officer should include information on waste stream names and synonyms, the specific waste characterization, and handling or management procedures within the unit HW SOP and be prepared to respond to subordinate units that require further information or clarification.

5-31. PPE is the primary means of safeguarding human health when handling hazmat, HW, and special waste. The need for PPE must be evaluated before handling any waste. When selecting PPE, it is important to check the manufacturer's MSDSs for hazmat and/or seek subject matter expertise regarding the hazardous properties of the HW or special waste. Table 5-4, page 5-9, lists NSNs for PPE that is commonly used when handling waste in a tactical environment. Waste handlers should decontaminate or dispose of contaminated PPE as soon as possible after use. Contaminated PPE must be characterized using the criteria described in paragraph 5-68 to determine if it must be managed as a HW. If respiratory protection is required, contact PVNTMED resources for assistance. Respirators will only be used by personnel who have received the pulmonary fitness text and have been properly fit tested by PVNTMED or trained personnel. For those respirators that use filter cartridges, there is no universal cartridge that will protect from all

chemicals so it is important to consult the MSDS or the PPE manufacturer's guidance. Those personnel who operate HWAPs or HWSAs may be required to wear additional PPE, to include fully encapsulating protective suits. Consult with the theater of operations environmental staff for guidance.

Table 5-4. PPE

NSN	Description
Aprons	
8415-01-189-6228	Rubber material, acid-resistant
8415-01-100-7742	Plastic material, oil-resistant and waterproof
Gloves	
8415-01-092-3910	Gloves, heat-protective, type 2, thermal protection (large)
8415-00-266-8673	Gloves, synthetic rubber, industrial, type 1, acid- and alkali-resistant (size 12)
8415-00-266-8675	Gloves, synthetic rubber, industrial, type 1, acid- and alkali-resistant (size 11)
8415-00-266-8677	Gloves, synthetic rubber, industrial, type 1, acid- and alkali-resistant (size 10)
8415-00-266-8679	Gloves, synthetic rubber, industrial, type 1, acid- and alkali-resistant (size 9)
8415-01-138-2497	Gloves, butyl rubber, acid- and alkali-resistant
8415-01-138-2498	gloves, butyl rubber, acid- and alkali-resistant
Eye and Face Protection	
6850-01-353-9947	Eyewash, self-contained, portable
6850-01-444-3371	Eyewash solution
4230-01-026-9305	Shower, emergency drench
4240-00-202-9473	Face shield, industrial
4240-01-292-2818	Goggle, industrial
4240-00-052-3776	Molded-plastic flexible frame with clear plastic lenses and adjustable headband
4240-01-292-2818	Polycarbonate plastic lenses with molded plastic frame (may be worn over glasses)
Legend: NSN national stock number	

5-32. When the recommended PPE is unavailable, field-expedient PPE (such as field gloves, goggles, and wet-weather gear) should be used to help protect Soldiers when handling hazmat and HW or in the event of a spill. However, field-expedient PPE should only be used when the required PPE is unavailable since it does not provide the same level of protection. Gear that is used as field-expedient PPE should not be reused for its original purpose.

TRANSPORTATION

5-33. HW and special waste shipments must comply with all hazmat, HW, and special waste transportation requirements in theater. Drivers must be certified to transport hazardous cargo, which is coordinated through the supporting transportation unit. HW and special waste should only be transported in vehicles approved for that purpose. Each approved vehicle should be inspected to ensure that it has the appropriate placards and manifests for the materials being transported, such as DD Form 836 (*Dangerous Goods Shipping Paper/Declaration and Emergency Response Information for Hazardous Materials Transported by Government Vehicles*), a copy of the spill response plan, and the necessary emergency equipment, to include—

- Spill kits, based on the types of HW being transported, which will provide containment and allow cleanup. At a minimum, each vehicle should carry approximately 25 pounds of absorbent, two picks, two nonsparking shovels, one broom, and several small and large heavy-plastic bags to hold contaminated soil and/or absorbent.
- ABC-type fire extinguisher.
- Potable water for eye washing and decontamination.
- Two sets of appropriate PPE, based on the type of HW and MSDSs.
- Means of communication.

5-34. There are also special requirements if HW must be transported on military aircraft. Waste management planners should coordinate those requirements with the unit transportation officer. Vehicles used to transport radioactive waste must be surveyed by a radiation safety officer or CBRN personnel after each use to assess any residual contamination. The vehicle may not be used for transporting nonradioactive materials until cleared by the radiation safety officer or CBRN personnel.

RECOVERY

5-35. As discussed in chapter 1, recovery aims to divert waste material from waste streams to reduce the overall amount of waste requiring disposal. In managing HW and special waste, just as with managing nonhazardous SW (see chapter 3), waste management planners are primarily focused on recycling and reusing to minimize the amount of waste that requires disposal. Since recycling may not be available at the onset of operations, waste management planners must be prepared to store recyclable hazmat until the means for recycling through contracting or a local recycling market is established.

5-36. Reusing hazmat is the easiest way to reduce the amount of HW and special waste requiring disposal. Units can facilitate reuse by keeping usable materials out of the hazmat waste stream and creating suitable reuse strategies in a consolidated storage area or hazardous material pharmacy that is conveniently accessible to units. Some common hazmat within units that can be reused include, but are not limited to:

- Paint.
- POL.
- Solvents.

5-37. Used-oil blenders can be used to blend used engine oil (only from diesel engines) into the fuel tanks of vehicles and generators that burn diesel fuel. Blenders are specially designed shop tools that collect used oil from a diesel engine crankcase, collect an equal amount of fuel from the vehicle or generator fuel tank, blend the two products together, and filter the blended product before pumping it back into the tank as fuel. This procedure avoids the cost of collecting, storing, transporting, and disposing of used engine oil. In addition, the cost of the fuel displaced by the engine oil is avoided and the total volume of fuel needed and transportation requirements are reduced.

5-38. Oil that cannot be used for its intended purpose may be transferred through a government contract to local vendors for use as fuel in various manufacturing processes (such as oil refineries). The environmental officer will verify and document this use before transferring oil to a local vendor. If authorized by theater or brigade SOPs, oils can be blended with diesel fuels and used as accelerants in incinerators that have the proper tanks installed.

DISPOSAL

5-39. The primary means for disposing of HW and special waste within a theater of operations will be through a qualified contractor or a DRMS facility established in theater. Local contracts must be approved through the chain of command to ensure that they meet the disposal criteria established for the theater of operations. If local contractors cannot be used, waste must be transported to a DRMS facility or HWSA within the theater. Units may never incinerate or bury HW (and certain special waste) unless explicitly approved by both U.S. and HN authorities.

Batteries

5-40. Used lead-acid, nickel-cadmium, mercury, lithium, silver, and magnesium batteries usually meet the criteria for classification as HW and are subject to all of the HW management requirements previously discussed. Additionally, each type will have specific segregation requirements regarding compatibility. Some batteries may be required to have their terminals taped off to prevent the possibility of sparking in case a residual charge exists. Lead-acid batteries may be palletized as long as they are protected from the weather and damage. They should not be stacked more than two-high to prevent the possibility of fire or explosion. Lead-acid batteries at CONUS or outside the continental United States installations are generally on a one-for-one exchange program because they are highly recyclable. If recycling is possible in the theater of operations, all recyclable batteries should be recycled. It is also important to note that magnesium batteries can emit hydrogen gas and, therefore, should not be collected in airtight containers. However, once they are 50 percent depleted, they are no longer HW and become SW. Used alkaline batteries are not HW and may be landfilled with regular trash. If trash is burned locally, alkaline and magnesium batteries should be collected and disposed separately to prevent injury from batteries bursting in the fire. See Technical Bulletin (TB) 43-0134 for more detailed information on battery disposition, disposal, and safety.

Aerosol Cans

5-41. Intact aerosol cans meet the criteria for reactive HW. Local policy may authorize the use of commercial puncturing devices to render that waste nonhazardous; however, units must ensure that any remaining substances in the cans do not meet the requirements for classification as a HW. Once punctured, most cans may be recycled for scrap metal. Aerosol cans containing paint are discussed in paragraph 5-52. A commercial puncturing device captures the remaining contents and vapors from the aerosol can. A separate puncturing system must be used for each waste stream. For example, use separate puncturing systems for aerosol paint cans and aerosol pesticide cans so that these waste streams are not mixed.

Light Bulbs

5-42. Spent lamps (including fluorescent, high intensity discharge, neon, mercury vapor, sodium vapor, and metal halide) contain heavy metals and may meet the criteria for classification as toxic HW. Although most commonly used lamps contain extremely low levels of toxic substances, discarded bulbs can still pose environmental and health hazards when landfilled in large quantities. The best practice is to collect all spent lamps—especially mercury-containing bulbs (like fluorescent lamps)—in containers that will help prevent breakage (such as the cardboard sleeve or box the replacement bulbs are removed from) then turn in for recycling. If lamps are broken, ventilate the area where breakage occurred, sweep up the residue, and place it in a sealed plastic bag. Broken, mercury-containing bulbs should be disposed of as HW.

5-43. Discarded light ballasts should be evaluated for polychlorinated biphenyl content and disposed of through the Defense Reutilization and Marketing Office. Expended light ballasts, especially older versions, may be hazardous due to polychlorinated biphenyl. Unless the casing specifically states that it is an electronic ballast that does not contain polychlorinated biphenyl or that it is not an Environmental Protection Agency HW, it must be assumed to contain polychlorinated biphenyl and handled as HW.

Petroleum Contaminated Soil

5-44. Fuel spills are the most common source of HW in a field environment. Depending on the size of the spill, the resulting contaminated soil or absorbent should be shoveled into leakproof containers (such as heavy-plastic bags or drums) and transported to a designated soil collection facility or HW accumulation site. Information on spill response is provided in appendix C. Petroleum contaminated soil can be bioremediated on-site (if SOPs detailing the process are available) or treated at a larger facility.

Pesticides

5-45. The disposal instructions printed on pesticide container labels or package inserts must be followed. Many waste pesticides meet the criteria for classification as HW. The best way to minimize pesticide waste is to carefully plan the amount needed before mixing so that all of the product will be expended during use. Additional disposal guidance for pesticides can be found in the Armed Forces Pesticide Management Board

Technical Guide (TG) 21. If a pesticide is packaged in an aerosol can, the can will need to be punctured in a commercial puncturing device. The residue and vapor will be captured and must be managed as HW. It will need to be collected and segregated from other waste material and cannot be containerized with paint waste. Pesticides for personal use and application need to be used up before disposing of the container as SW. If personal-use pesticides have been allowed to exceed their shelf life and will be disposed of in bulk, they must be handled as HW.

Flameless Ration Heaters

5-46. When exposed to water, flameless ration heaters produce heat and hydrogen gas. In small numbers, these hazards are not great enough to warrant classification or management as HW, and the heaters may be disposed of with regular trash. However, bulk quantities of unused flameless ration heaters (not issued to personnel and not packaged with meals, ready-to-eat) do meet the criteria for reactivity and are HW. The best management practice is to collect unused flameless ration heaters for future use/reissue or instruct personnel to activate the flameless ration heaters with their meal before disposal in the regular trash.

Maintenance Waste

5-47. All maintenance waste is not HW. Maintenance waste must be evaluated to determine if it is HW or special waste. For example, used oil and antifreeze are categorized as special waste. Waste solvents, grease, dry sweep, and used rags must be evaluated for classification as a HW. Generally, used rags can be laundered and reused. Oil dry/dry sweep will generally be nonhazardous or special waste unless it is used to absorb a material that is hazardous. Oil, fuel, and other filters (not including air filters) must also be segregated from regular trash and collected for recycling or HW disposal. Used oil filters should be gravity-drained, with both the liquid contents and the drained filter collected separately in metal drums. Non-terne-plated, metal oil filters should be hot-drained, crushed, and recycled with scrap metals.

5-48. Cleaner, lubricant, and preservative manufactured after March 1994 (for example, Break-Free®) is nonhazardous; and the rags, towels, and swabs used with it can generally be disposed of as regular trash. Cleaner, lubricant, and preservative manufactured before March 1994 and waste generated from using it should be collected and undergo a waste characterization analysis to determine proper handling and disposal requirements. The waste characterization of weapons-cleaning waste should also be analyzed to verify that it is not hazardous for lead content.

5-49. Solvents used for parts cleaning should be evaluated based on the MSDS and lab analysis to determine waste characterization when spent. There are solvents available that are approved for military applications and are considered nonhazardous and more user-friendly and environmentally friendly. Efforts should be made to prevent solvents from impacting the environment due to evaporation, spills, or drips. For example, allow excess solvent to drain from a part before it is removed from the basin to prevent solvent from dripping onto the ground (referred to as “drag out”), and keep the lids on solvent tanks closed except when not being actively used to prevent evaporation.

5-50. When cleaning solvent tanks, there are three distinctive waste streams that must be considered: the spent solvent, the sludge that develops at the bottom of the tank, and the solvent filter used to extend the life and usefulness of the solvent. If the solvent being used is hazardous, all three must be handled as HW. If the solvent being used is environmentally friendly (such as Ecolink), the solvent may remain nonhazardous after use. However, the solvent filter and the sludge at the bottom of the tank will probably be hazardous due to heavy metals that have been picked up while parts were being cleaned. All three waste streams will need to be individually evaluated.

Paints

5-51. Open paint containers with leftover paint should be turned in to unit supply for reissue or redistribution. The handling requirements for discarded paint and paint containers will vary based on the type of paint. For example, latex paint is water-based and is not considered hazardous. Small amounts (for example, the waste generated through brush cleaning) may be flushed into a sanitary treatment facility (excluding septic tank systems) or allowed to dry and then disposed of with the regular trash. Oil-based paint is considered hazardous and must be containerized as HW for disposal. Oil-based paint becomes

nonhazardous SW once it is dry and may also be disposed of with the regular trash. Paint thinner is hazardous and can be combined in the same container with the oil-based paint for disposal. Chemical agent-resistant coating paint can be hazardous due to heavy metals unless a water-based version is being used. The waste characterization of chemical agent-resistant coating paint should be verified.

5-52. Spray paint cans should be punctured and drained into the appropriate paint waste container. The can should be allowed to dry and be disposed of as scrap metal or with the regular trash. Aerosol cans containing paint should not be placed in the general refuse. The aerosol can is considered hazardous if not punctured, and the paint remaining in the container is flammable.

Field Sanitation Team Waste

5-53. Several unit field sanitation team supplies (including pesticides) become HW when discarded. Manage granular calcium hypochlorite as HW (even though some formulations may not meet the criteria for HW) because of the dangers posed by its highly corrosive and oxidizing nature. Calcium hypochlorite should not be burned with regular trash or buried in landfills.

Asbestos

5-54. Asbestos can still be found in some pipe insulation, roofing and siding, floor tiles, and brake shoes. All asbestos abatement activities should be performed by approved contractors or other certified personnel. Waste that contains asbestos is a special waste. Material containing asbestos should be wetted and double-bagged and sealed with duct tape or placed in an airtight container. Label all containers of asbestos waste with the following: "DANGER—CONTAINS ASBESTOS FIBERS—AVOID CREATING DUST—CANCER AND LUNG DISEASE HAZARD." Disposal will normally occur in an approved landfill.

Range and Ammunition Residue

5-55. All range residue (such as used and unused ammunition, ammunition boxes, and spent casings) should be returned to the ammunition supply point. Range residues will be segregated for HW disposal or recycling at the ammunition supply point.

Radioactive Waste

5-56. Radioactive waste should only be handled by designated radiation safety or CBRN personnel and managed according to AR 700-48. DLA/DRMS does not manage radioactive waste. Disposable gloves should be worn before handling small quantities of suspected low-level radioactive items (such as damaged tritium compasses, fire control azimuths, or chemical-agent monitors). Low-level radioactive items should be double-bagged in plastic bags. Ensure that the package is marked as "SUSPECTED RADIOACTIVE WASTE" and that the items are not removed from the bags until the package reaches its ultimate destination. Maintain a strict chain of custody for these items during transport. Department of the Army (DA) Form 4137 (*Evidence/Property Custody Document)* may be used to document the chain of custody. Record the names and units of any personnel that may have come into contact with the contaminated items and the dates of exposure. Provide this information to radiation safety and medical personnel.

Chemical, Biological, Radiological, and Nuclear Waste

5-57. Turn in used protective mask filters, protective garments, personal decontamination kits, and CBRN detectors to the unit CBRN noncommissioned officer for proper disposal. All items suspected of CBRN contamination should be sealed in leakproof bags or drums and disposed of as HW. Record the names and units of any personnel that may have come into contact with the contaminated items and the dates of exposure; provide this information to medical personnel. Bulk decontamination agents are extremely corrosive and must be managed as HW when discarded. See TB MED 593 for information on managing medical CBRN defense materiel.

HW AND SPECIAL WASTE MANAGEMENT PLAN

5-58. A HW and special waste management plan is developed using the 6-step process that was introduced in chapter 2. The keys to a successful HW and special waste management plan are—

- Understanding which waste is hazardous and special.
- Safeguarding HW and special waste throughout collection, transportation, and disposal.
- Assigning responsibilities and establishing procedures and standards for each aspect of the plan (segregate, collect, transport, recover, and dispose).
- Establishing the means to enforce standards through training, supervised execution, and inspections.

5-59. The G-4/S-4, engineer staff officer, and environmental officer must work together and coordinate with other members of the staff to effectively manage HW and special waste. The G-4/S-4 is the staff proponent for distributing, transporting, storing, and recovering hazmat and ensures that subordinate units have the necessary equipment and materials needed to establish proper HWAPs and/or HWSAs. The engineer staff officer—as the primary staff integrator for the environmental program, which includes waste management—is responsible for integrating HW and special waste into the unit waste management plan and incorporating the necessary tasks within operation orders and plans to ensure that HW and special waste is effectively managed (also see paragraph 5-15). The environmental officer assists the G-4/S-4 and the safety officer in developing the hazmat management plan. Because of the relation between hazmat, HW, and special waste, the environmental officer incorporates relevant hazmat-related information within the HW and special waste management plan and SOP.

5-60. The environmental officer also establishes the standards and requirements for conducting inspections as a means of ensuring compliance. The HW and special waste management plan and SOP must collectively address the proper characterization of HW and the requirements for accumulation areas, container management, labeling, documentation, inspections, and recordkeeping.

5-61. One of the primary objectives in managing HW and special waste is reducing the amount that is generated. This can be achieved by—

- Using alternative nonhazardous or less hazardous materials and/or hazmat that can be recycled.
- Reducing the inventory of hazmat, based on the responsiveness of the supply system without risking mission readiness.
- Preventing subordinate units from stockpiling hazmat and ensuring that excess hazmat is turned back in for redistribution.
- Ensuring that hazmat is used before the shelf life expiration (first in, first out) or extending an expired shelf life when appropriate.
- Ensuring that hazmat is properly stored and safeguarded.
- Reusing or recycling hazmat.
- Ensuring that waste streams are segregated to prevent HW from mixing with nonhazardous waste.

5-62. Waste management planners must understand the standards for hazmat, HW, and special waste management established for the theater of operations. The requirements in theater will likely be different from those on CONUS or outside the continental United States installations, which are based on U.S. federal, state, and local regulations. Requirements in theater will be based on the Overseas Environmental Baseline Guidance Document, SOFA, North Atlantic Treaty Organization standards, and HN laws. In some cases, where the Overseas Environmental Baseline Guidance Document and SOFA have not been established and HN laws are indefinite or nonexistent, U.S. forces will follow U.S. federal environmental laws as closely as practical. Soldiers at every level should receive annual environmental awareness training. HWAP and HWSA operators, commanders, EOs, and first-line leaders should be familiar with AR 200-1, *Environmental Considerations*, and this publication (at a minimum). Commanders must ensure that subordinate units are knowledgeable on the theater-specific requirements for handling, accumulating, and storing hazmat, HW, and special waste before setting up storage and accumulation sites. Leaders down to the lowest level must understand and enforce these standards with their Soldiers. Training should be

directed at first-line leaders and personnel involved in spill response, maintenance, fuel, motor pool, supply, transportation, and water production activities. Additional training should be provided to personnel involved in using, handling, and managing hazardous substances. Training should be performed and documented before deployment and before appointing personnel to hazmat and/or HW responsibilities. At a minimum, hazmat and HW training should include—

- Hazard communication.
- Hazmat training.
- Spill contingency planning and spill response training.
- Hazardous waste operator training.
- Hazardous waste management training.
- Environmental officer training.

5-63. Additional training in the following areas is recommended:

- Composite risk management/operational risk management.
- Transportation of hazmat/HW.
- Lead/asbestos awareness training
- Safety awareness training.

5-64. There are many resources that can be used to obtain the needed training, available as classroom and Web-based training. Check with the installation environmental office first for the availability of this training prior to deployment. They may be able to provide training or guidance for finding it. The U.S. Army Engineer School, Directorate of Environmental Integration supports a Web-based Environmental Officer Course that can be found on the Fort Leonard Wood Blackboard Portal <https://www.blackboard.wood.army.mil/> under the engineer tab. This site requires an Army Knowledge Online account to access it. In addition, the Directorate of Environmental Integration also provides other training resources. Other resources that can provide information for accessing classroom and Web-based training include—

- U.S. Army Combat Readiness/Safety Center.
- Occupational Safety and Health Administration.
- DLA Human Resources.
- Army Logistics University.
- U.S. Army Environmental Command.
- USACE Purple Book.
- DOD Interservice Environmental Education Review Board.
- Environmental Protection Agency.
- Local universities or community colleges.

STEP 1. ANALYZE THE SITUATION

5-65. During mission analysis, waste management planners attempt to gain a better understanding of how, where, how much, and what types of HW and special waste will be generated by the unit. Since U.S. laws and regulations will generally not apply within the theater of operations, additional guidance will be required that specifies what constitutes HW and special waste. In situations where planners are uncertain of the categorization or characteristics of waste material, they should submit RFIs through higher headquarters and/or seek subject matter expertise or assistance through the environmental officer or reachback. When uncertainties exist, waste management planners should make planning assumptions or temporarily contain the waste in question using the more stringent standards for storage or disposal while awaiting clarification.

5-66. Waste management planners use the METT-TC variables to frame their assessment of the HW and special waste situation. Table 5-5, page 5-16, shows METT-TC considerations that are focused on HW and special waste.

Table 5-5. HW and special waste considerations in relation to METT-TC

METT-TC Variables	Considerations
Mission	• Types and quantities of hazmat expected to be used during operations, based on— ▪ Likely types of missions. ▪ Size and types of units and the functions and activities being performed. ▪ Hazmat inventories within unit supply inventories and basic loads. • Impacts on being able to properly collect, transport, and store HW and special waste, based mission demands.
Enemy	• Vulnerability of hazmat storage and HW accumulation sites. • Threats to transporting waste to storage areas within the operational area.
Terrain and weather	• Effects of terrain and weather on collecting, accumulating, and transporting HW and special waste. • Existing infrastructure (roads and facilities) that can be used for collecting, storing, and transporting HW and special waste.
Troops and support available	• Capability to collect, transport, and store HW and special waste. • Capacity of the HN to accommodate HW and special waste treatment and disposal. • Availability of local and nonlocal contractor support. • Availability of DRMS facilities in theater. • USACE and USAPHC support and assistance teams (reachback). • Specialized equipment and materials for handling, collecting, transporting, treating, and disposing of HW and special waste. • Funding.
Time available	• Time available for planning (level of detail). • Time available for constructing accumulation and storage sites. • Shipping times for specialized equipment and materials.
Civil considerations	• Restrictive areas for storing hazmat and accumulating HW (such as billeting or residential areas, historical or cultural sites, environmentally sensitive areas, and food and water sources).
Legend: DRMS HN HW METT-TC USACE USAPHC	 Defense Reutilization and Marketing Service host nation hazardous waste mission, enemy, terrain and weather, troops and support available, time available, and civil considerations U.S. Army Corps of Engineers U.S. Army Public Health Command

STEP 2. DEVELOP PRELIMINARY WASTE ESTIMATES

5-67. Waste management planners determine preliminary HW and special waste requirements as far in advance as possible by estimating consumption rates of hazmat, which are determined by analyzing unit equipment lists, hazmat inventories, and the types of activities that will likely be performed during the course of the operation. While planning, they must be particularly aware of certain types of equipment. For example, equipment that relies on batteries will likely be considered hazardous when discarded. Such equipment may not have presented a problem during short duration training exercises near U.S. military installations, but could become a challenge during a protracted operation in an austere environment. As COAs and associated concepts of the operation are developed during step 3 of the MDMP, waste management planners develop preliminary HW and special waste requirements for each subordinate unit (one level down). Using a matrix, such as the sample work sheet shown in table 5-6, page 5-17, waste management planners begin this step by listing the activities that generate HW and special waste and estimating the amounts that will be generated, based on the activity and its frequency of occurrence.

Table 5-6. Sample HW and special waste requirements work sheet

Subordinate Unit	Immediate	Basic

	Activities that Generate HW and Special Waste	*Estimated Amount Generated by Activity*	*Required Resources (list resources required to manage HW and special waste generated)*	*Activities that Generate HW and Special Waste*	*Estimated Amount Generated by Activity*	*Required Resources (list resources required to manage HW and special waste generated)*
Company 1	Motor vehicle breakdown or collision with fluid loss on the ground	Amount of contaminated soil will be dependent on the vehicles involving	• Shovels • Black garbage bags or other containers • Spill kits • Appropriate labels	Semi-annual services for 100 MMWVs (2 gallons of engine oil twice/year)	• 37 gallons of used oil/ month • 17 filters/ month	• Materials to set up HWAP in the motor pool • Appropriate containers • Spill kits • Means to transport filled containers to HWSA
Note. This work sheet may be expanded to incorporate all subordinate units and phases of an operation.						
Legend: HMMWV high mobility multipurpose wheeled vehicle HW hazardous waste HWAP hazardous waste accumulation point HWSA hazardous waste storage area SW solid waste						

5-68. Waste management planners must determine and characterize the HW and special waste generated by the unit. They identify inherent hazardous characteristics associated with a waste in terms of physical properties (such as solid, liquid, or contained gases), chemical properties (such as chemical constituents, technical, or chemical name), and/or other descriptive properties (such as ignitable, corrosive, reactive, and toxic). A HW SOP should be developed that contains a HW profile sheet (such as DD Form 1348-1A and DRMS Form 1930) that is used to identify each HW stream that provides waste management guidance. The HW profile sheet must be updated, as necessary, to reflect any new waste streams or process modifications that change the character of the HW being handled, collected, accumulated, or stored. The theater senior engineer staff officer and environmental officer work together to develop the necessary guidance and/or a HW SOP for the theater of operations and update it with new information as appropriate.

5-69. Several sources of information are available online, such as the HMIRS and the military items disposal instructions (MIDI) database, that are helpful in determining the harmful characteristics of a material and whether or not it becomes a HW or special waste when discarded. The HMIRS is a central repository of MSDSs for military supply items. The DLA maintains this database and allows users to search for product information by several means, such as by nomenclature or NSN. These data sheets provide information on the characteristics of specific materials, such as flash point, acidity, concentration, and toxicity. The HMIRS can be accessed through the DLA Web site at <http://www.dlis.dla.mil/hmirs/default.asp>. The MIDI database is available through USAPHC and provides guidance for the disposal of military items. It is accessible through the USAPHC Web site at <http://usaphcapps.amedd.army.mil/MIDI/>.

STEP 3. CATEGORIZE WASTE REQUIREMENTS

5-70. As discussed in chapter 2, the waste requirements for each subordinate unit (one level down) are categorized (immediate, basic, enhanced, expanded, and transfer and closure) based on expected duration. HW and special waste requirements, based on preliminary estimates, are developed in the work sheet as seen in table 5-6. The full range of HW and special waste requirements is prepared to the fullest extent possible, based on the best information that is currently available, for each COA being developed. When

uncertainties arise, RFIs are submitted to higher headquarters and/or assumptions are made to facilitate the continuation of planning.

STEP 4. EVALUATE WASTE MANAGEMENT CAPABILITIES

5-71. Waste management planners evaluate the available capabilities (to include skill sets) and resources (manpower, equipment, materials, and funding) for each subordinate unit (one level down). This evaluation determines a unit's ability to meet HW and special waste requirements for each phase of the operation and allows capability-based solutions to be generated to meet those requirements. When a shortfall exists between the capabilities and requirements, the subordinate unit is reinforced with additional support or provided additional resources (to include funding) that will allow it to generate its own capabilities or acquire and sustain the needed support or services through contracting.

STEP 5. GENERATE SOLUTIONS

5-72. In consideration of the mission variables, waste management planners generate capability-based solutions to meet the collection, transportation, recovery, and disposal requirements of the estimated HW and special waste that will be generated by each subordinate unit (one level down). Capability-based solutions are feasible, based primarily on the capabilities that are available in the current task organization, or that are likely to be made available, based on augmentation from higher headquarters or through contracted support—in which case, a critical assumption must be made and captured during the planning process. Waste management solutions and the required resources and capabilities are depicted for each requirement (within each critical event or phase) using a matrix or work sheet.

STEP 6. INTEGRATE WASTE MANAGEMENT TASKS INTO PLANS AND ORDERS

5-73. Once the maneuver COA is selected and approved by the commander, waste management planners finalize the waste management tasks that need to be performed to achieve objectives for collecting, transporting, recovering, and disposing of HW and special waste. This includes reviewing the troop-to-task analysis for each task to ensure that the unit assigned that task has the necessary resources (and capabilities) to perform it. Waste management planners may also need to coordinate those tasks with other staff sections and other waste management planers at higher, adjacent, and lower units to ensure that they are appropriate and/or supportive of other requirements. The finalized tasks and other information that subordinate units will need to effectively manage HW and special waste that is not already included in SOPs is then integrated within the operation plan or order, usually in the engineer or the sustainment annex or as directed in the unit planning SOP. Waste management tasks can be provided in a matrix format and embedded within, or attached to, an annex.

5-74. The information contained in hazmat, HW, special waste, and environmental SOPs; guidelines and policies established for the theater of operation; and the operation plan or order provides subordinate units with the details needed to effectively manage HW and special waste. Waste management planners at all echelons must work together to ensure that the information provided in these documents is mutually supportive and collectively addresses the following areas, at a minimum:

- Safety and risk management in mitigating the health and environmental hazards associated with hazmat, HW, and special waste, to include the requirements for spill prevention, response, and reporting.
- Staff and subordinate unit responsibilities for segregating, collecting, transporting, recovering, and disposing of HW and special waste.
- Requirements for storing, issuing, and turning in hazmat.
- Requirements for accumulating, treating, and disposing of HW and special waste.
- Requirements for establishing and operating HWAPs and HWSAs (see paragraph 5-11).
- Inspection requirements (when and by whom) for HWAPs and HWSAs and the checklists that will be used.
- Priorities of support and priorities of effort (work) for each phase of the operation if the operation is phased.

- Training and certification requirements for personnel performing or supervising HW and special waste management tasks.
- General safety considerations associated with handling various types of HW and special waste.
- Procedures for characterizing, documenting, and marking HW and special wastes.

5-75. Tasks that support the HW management plan should also be included in logistics rehearsals and backbriefs to ensure that subordinates plans are feasible and/or supportable by higher headquarters.

BASE CAMP TRANSFER AND CLOSURE

5-76. Proper environmental site closure or turn-over is the responsibility of the departing unit. Upon receipt or in anticipation of a notice to close or transfer the base camp, waste management planners develop a closure plan that describes the disposition of HW and special waste accumulation points and storage areas and the actions necessary to return those areas to their preexisting state or the required condition for closure or transfer. The ESCS is the mechanism used to document the final condition of the occupied property and to ensure that units have properly prepared sites for closure or transfer. It must be completed before the unit is released of its responsibility for the site. The EBS and ECRs that have been completed during occupation of the site will be used as the basis for the ESCS. The unit environmental officer will coordinate through the area environmental office or the environmental officer at higher headquarters for any support needed to conduct the ESCS.

5-77. If portions of a base camp are being transferred to another force or back to the HN, an ECR may be completed. An ECR is the means to document changes to an EBS that was previously performed. In this case, the ECR should reference the original EBS. All EBS and closure reports are maintained by the owning unit until the base camp is closed or transferred to the gaining unit. Copies of all EBSs and ECRs are maintained at the base camp level and at the theater level. EBS, ECRs, and closure reports should be electronically archived indefinitely.

5-78. The unit site closure plan provides detailed information that subordinate units will need to properly close or transfer a base camp. The plan complements, and is supportive of, information contained in unit SOPs, orders, and plans issued by higher headquarters. The following areas should be addressed in site closure plans and/or SOPs:

- The disposition of reusable hazmat.
- The requirement for packaging, containerizing, inventorying, labeling, and turning in HW and special waste for disposal.
- The removal of contractor-furnished equipment and the cleanup of the surrounding area.
- The disposition of empty HW and special waste containers, to include standards for turn-in.
- The removal of fuel bladders, blivets, secondary containment liners, and associated fuel distribution equipment and the remediation standards necessary for any affected areas.
- The disposition of secondary containment and force protection berms.

5-79. The unit site closure plan also describes the required actions, tasks, and standards that will need to be completed within a certain time frame and/or within a certain sequence to ensure that the base camp can be closed or transferred in a timely manner. These include the following:

- **60 days out.**
  - Make initial coordination with the appropriate environmental office or designated representative for the removal of HW and special waste from HWAPs.
  - Make initial coordination through the environmental officer for preliminary (30 days out) and final (24 hours out) ESCS.
  - Conduct an internal ESCS to identify critical environmental issues that must be resolved, and take necessary action.
  - Request support through appropriate channels for environmental support beyond the unit capability.
  - Ensure that proper supplies are on hand or on order to properly package and ship HW and special waste, including approved containers, labels, placards, and MSDSs.
  - Ensure that proper supplies and equipment are available to clean up identified or anticipated areas that will likely require action.
- **30 days out.**
  - Confirm that the final removal of HW and special waste has been coordinated.
  - Conduct the preliminary ESCS.
  - Take the necessary action on final site closure issues and requirements as identified by the preliminary ESCS.
  - Ensure that issues and requirements are resolved before the final ESCS.
- **24 hours out.**
  - Conduct the final ESCS.
  - Resolve any last minute environmental issues identified by the final ESCS.

Chapter 6

Medical Waste

This chapter provides waste management planners with an overview of medical waste and the roles and responsibilities for managing it at brigade level and below. It describes some of the unique requirements that must be considered in developing a plan for collecting, storing, transporting, and disposing of medical waste.

OVERVIEW

6-1. *Medical waste* is any waste that is generated in the diagnosis, treatment, or immunization of human beings or animals (U.S. Army Medical Command [MEDCOM] Regulation 40-35). Because of its unique characteristics and potential for causing infection, medical waste requires special precautions. Medical waste is further divided into nine categories, which are shown in table 6-1, page 6-2.

6-2. The responsibility for the management of medical waste rests with commanders at all levels who are supported by the engineering, logistics, and medical communities. The policies and procedures for characterizing, segregating, collecting, storing, and disposing of medical waste will be tailored to the theater of operations (based on governing U.S., international, and HN laws and policies). This effort is initiated by the medical command (deployed support) in coordination with engineers, logisticians, environmental officers, and other staff members at the theater level. Once theater-specific medical waste guidance has been established, it is disseminated to subordinate units through operation orders, operation plans, policy memorandums, and SOPs for incorporation into unit medical waste management plans and SOPs, down to the lowest appropriate levels.

6-3. There may be unique diseases within the theater of operations. Based on the nature of the disease, its prevalence, the means in which it is transmitted, and other medical and scientific factors, the theater surgeon or designated medical representative will designate whether or not nonbloody wastes generated from the treatment of these diseases are declared as medical waste.

RESPONSIBILITIES

6-4. The individual and staff responsibilities for medical waste management are outlined in the following paragraphs.

UNIT COMMANDER

6-5. The commander is responsible for the actions that a unit takes or fails to take. The commander's role in medical waste management includes the following tasks:

- Integrating medical waste considerations early in the planning phase and within each phase of the operation.
- Ensuring that subordinate units understand the requirements for medical waste and that the appropriate personnel are properly trained in managing it.
- Ensuring that subordinate units perform the necessary medical waste management tasks to standard.

Table 6-1. Categories of medical waste

Group	*Description*
1–Cultures, stocks, and vaccines	• Cultures and stocks of infectious agents and associated biologicals, including cultures from medical and pathological laboratories.

	• Discarded live and attenuated vaccines. • Culture dishes and devices used to transfer, inoculate, and mix cultures.
2–Pathological waste	• Human pathological waste, including tissues, organs, body parts, and extracted human teeth. • Body fluids that are removed during surgery, autopsy, or other medical procedures.
3–Blood and blood products	• Free-flowing liquid human blood, plasma, serum, and other blood derivatives that are waste (such as blood in blood bags and blood or bloody drainage in suction containers). • Items such as gauze or bandages that are saturated or dripping with human blood, including items produced in dental procedures such as gauze or cotton rolls saturated or dripping with saliva. This does not include products used for personal hygiene (such as sanitary napkins/tampons). • Items caked with dried blood and capable of releasing blood during normal handling procedures.
4–Used sharps[1]	• Sharps used in animal or human patient care or treatment in medical, research, or support laboratories or when used for live training purposes, to include: ▪ Hypodermic needles. ▪ Syringes (with or without the attached needle). ▪ Pasteur pipettes. ▪ Scalpel blades. ▪ Blood collection tubes and vials. ▪ Needles attached to tubing. ▪ Culture dishes. ▪ Broken or unbroken glassware, such as used slides and cover slips, that came in contact with infectious agents.
5–Animal waste	• Contaminated animal carcasses, body parts, and bedding of animals known to have been exposed to infectious agents during research (excluding carcasses of roadkills, euthanized animals, or animals dying of natural causes, and waste produced by general veterinary practices).
6–Isolation wastes	• Bedding from patients or animals with etiologic agents classified by the Centers of Disease Control and Prevention as biosafety level 4 (including biological waste and discarded material contaminated with blood, excretions exudate, or secretions from humans who are isolated to protect others from highly communicable diseases such as pox viruses and arboviruses).
7–Unused sharps[1]	• Same as 4–Used sharps.
8–Other	• Fluids that are designated by the local infection control authority, to include, but not limited to, semen, vaginal secretions, cerebrospinal fluid, synovial fluid, pleural fluid, peritoneal fluid, pericardial fluid, and amniotic fluid. These designated fluids are medical waste when free-flowing, dripping, or saturated on substrates.
9–Chemotherapy trace wastes	• Needles, empty vials and syringes, gowns, and tubing that contained chemotherapeutic pharmaceuticals or were exposed to chemotherapeutic pharmaceuticals during the treatment of patients.
[1]Syringes without needles, not tainted with body fluids, and used for procedures such as irrigation, may be discarded as regular trash unless directed otherwise. Discard unused and noninfectious glassware in boxes designated and labeled for “broken glass;” these boxes are usually found in laboratories.	

ENGINEER STAFF OFFICER

6-6. As the primary staff integrator for the environmental program, which includes waste management, the engineer staff officer is responsible for incorporating the medical waste management plan into the unit waste management plan. The engineer staff officer performs the following tasks:

- Includes medical waste hazards into the overall risk assessment performed for waste management.
- Ensures that medical waste management tasks are incorporated into the unit waste management plan that is conveyed through mission plans and orders.
- Works with medical staff officers in devising medical waste disposal methods that are supportive of the waste management plan, to include the development of scopes of work in initiating contracting support.

LOGISTICS OFFICER

6-7. The S-4 coordinates with the medical personnel assigned to the BCT headquarters and/or the brigade support medical company as appropriate to ensure that subordinate units have the necessary materials and supplies to manage medical waste.

MEDICAL PERSONNEL

6-8. The medical personnel assigned to the BCT headquarters and/or the brigade support medical company, as appropriate, will coordinate with the S-4 to ensure that subordinate units have the necessary materials and supplies to mange medical waste.

6-9. The medical personnel working within the facilities that provide medical, dental, and veterinary care are the primary generators of medical waste and are responsible for segregation at the point of generation. They are individually responsible for correctly categorizing the various types of waste and placing it into the designated containers for each waste type.

SURGEON

6-10. The surgeon works with PVNTMED personnel to develop unit procedures for managing medical waste according to the policies and guidance established for the theater of operations.

PREVENTIVE MEDICINE PERSONNEL

6-11. The PVNTMED personnel organic to or augmenting the unit work with the surgeon to develop unit procedures for managing medical waste according to the policies and guidance established for the theater of operations. They perform the following tasks:

- Provide medical waste management training to personnel working in medical treatment facilities.
- Monitor all phases of the medical waste management plan.
- Provide technical advice in identifying and characterizing medical waste.

INFECTION CONTROL OFFICER

6-12. Infection control officers work with PVNTMED personnel to monitor all aspects of the medical waste management plan. They also provide technical advice in identifying and characterizing medical waste.

PLANNING CONSIDERATIONS

6-13. Waste management planners use the approach described in chapter 2 to analyze the current situation using the METT-TC variables and to develop requirements for managing medical waste. Solutions are developed to fulfill the requirements that are feasible and suitable (based on unit capabilities, available resources, mission requirements, and health and environmental considerations). The tasks required to support medical waste management and the detailed information that subordinate units will need to execute those tasks are included in operation plans and orders, which complement established procedures contained in unit SOPs.

6-14. Personnel must be trained in the management and handling of medical waste, to include the wearing of proper PPE for the task, according to guidance from PVNTMED personnel. For more information on medical waste management, see DA Pamphlet 40-11, MEDCOM Regulation 40-35, TB MED 593, and TG 177. Additional information can also be found on the USAPHC Web site at <http://phc.amedd.army.mil/Pages/default.aspx>.

CHARACTERIZATION

6-15. Properly characterizing and segregating medical waste are critical tasks in effectively managing it. Not all of the waste generated by medical activities is medical waste. In most cases, the items that provide universal precautions (such as gloves and masks) can be classified as regular trash, not medical waste. Waste that is generated in patient sleeping or therapy rooms, rooms used for diagnostic procedures, doctor offices, and nursing units (such as soiled dressings, bandages, disposable catheters, swabs, and used disposable drapes, gowns, masks, gloves, feminine hygiene products, soiled diapers, and empty [used] specimen containers or cups) may not require any treatment and can be disposed of as regular trash.

COLLECTION

6-16. Medical waste is segregated from regular trash at the point of generation and remains separated from other waste streams until it reaches its final destination (except as required for burning). Medical waste is collected in red bags or another specified color for the theater of operations. Efforts must be made to ensure that the waste being placed into red bags does not contain any ammunition, unexploded ordnance, or other explosive hazards. All bags or receptacles used to segregate, transport, or store medical waste must be clearly marked with the universal biohazard symbol and the word "BIOHAZARD" in English (see figure 6-1) and any other language that is prevalent in the operational area.

Figure 6-1. Universal biohazard symbol

6-17. Sharps are collected in puncture-resistant, leak-resistant, and uniquely colored or marked containers. If proper containers are not available through the supply system, any rigid plastic or metal container (such as coffee cans or plastic drink bottles) can be used for collection. These expedient containers should be placed into red bags or proper sharps containers as soon as possible for disposal. Medical waste is never compacted before disposal. When being sealed, bags containing medical waste must not be shaken or squeezed in an attempt to reduce volume.

6-18. Universal precautions must be taken when handling, transporting, and disposing of medical waste. This includes wearing protective gloves, masks, aprons, or other PPE that will reduce risks associated with medical waste.

STORAGE

6-19. Medical waste storage areas should be located near medical units and where access can be controlled. Medical waste must be stored in access-controlled areas that are ventilated and offer protection from the sun, rain, and pests. Medical waste must never be mixed or stored with regular trash or HW. The type,

quantity, and disposition of stored medical waste should be recorded in a logbook or electronic journal for proper tracking purposes.

6-20. If the situation allows, the usual time for freezer storage of medical waste is approximately 30 days. Medical waste (other than sharps containers) should not be stored above 40°F for more than 5 days. Medical waste must be stored in a manner that prevents it from becoming a further hazard to the health and well-being of Soldiers. Storage areas must be away from food and common areas. Storage areas must be indicated by clearly displaying the universal biohazard symbol and the word "BIOHAZARD" in English and any other language that is predominately used in the operational area. A covered cargo trailer may be used for storage to facilitate the follow-on transportation of the waste from the medical treatment facility as long as storage requirements can be met.

6-21. Besides the space needed for storing medical waste, additional space should be allocated for storing supplies, including spill and cleanup kits, medical storage bags, sharps containers, storage drums, PPE, and shipping labels. Space will also be needed for power generators and refrigeration units that are required for storing pathological wastes.

TRANSPORTATION

6-22. Medical waste is considered a hazmat for transportation purposes and must comply with the requirements described in chapter 5. Medical waste may be transported in military, government, or contractor vehicles. It must be secured to prevent excessive movement and cannot be transported in the same vehicle with food items. Vehicles used to transport medical waste must be cleaned and disinfected before being used for any other purpose.

6-23. A spill kit must be readily available to decontaminate any surfaces in the event of a leak or spill. The spill kit should include appropriate PPE, a disinfectant, absorbent material, and equipment used to gather spill residue. The kit may be assembled at the unit level or purchased commercially.

TREATMENT AND DISPOSAL

6-24. Contractors with the requisite training, skills, and equipment should be used for medical waste disposal whenever possible. Scopes of work for contracts must be precise in outlining the proper procedures for disposing medical waste. Medical waste contracts should be based on weight (not volume) or the number of containers. Once a contract is awarded, the contracting officer or the COR is responsible for monitoring the contractor's performance for compliance according to the performance work statement within the contract. (Additional COR responsibilities are described in chapter 1.) The environmental officer and the surgeon should jointly inspect any HN disposal facilities before disposing of medical waste to confirm that the waste will be reduced to a safe environmental standard.

6-25. When contractor services are unavailable, the hierarchy for medical waste is high temperature two-stage incineration, sterilization, retrograding, burial, or alternative technologies to treat and dispose of medical waste according to guidance provided for the theater of operations.

Incineration

6-26. The preferred method for disposing of medical waste is by incineration in an approved medical waste incinerator. Open burning of medical waste is prohibited during contingency operations, except when no alternative disposal method is feasible. Burning medical waste may be permitted using approved open-burning methods if approved through the theater commander and by the combatant commands. The combatant command is the authority and responsible entity, as delegated by the Secretary of Defense, to determine situations or circumstances under which no alternative disposal method is feasible. The open burning of medical waste must conform with policies and procedures established for the theater of operations and be outlined in the SW management plan for the contingency operation. At locations where medical waste is being disposed of through open burning, the combatant command will issue specific engineering and medical guidance that maximizes the protection of human health and safety.

6-27. Incineration and burn activities should be conducted as far downwind as possible (at least 450 feet) from inhabited areas. The use of a commercial incinerator that is capable of subjecting the waste to a

minimum burn temperature of 1,500°F for at least 1 hour is the preferred method of destruction. A berm or fence with the appropriate warning signs should be constructed around the medical waste incinerator to prevent unauthorized access.

6-28. Incinerator operators must be trained on proper operating and maintenance procedures, safety measures (to include PPE use), emergency response, and environmental requirements. Incinerator bottom ash and air pollution control ash (if applicable) must be tested for HW properties prior to disposal in a SW landfill. Ash that is characterized as HW must be properly managed and disposed of as HW as described in chapter 5. Aerosol cans, gas cylinders, batteries, and other items that present an explosive hazard must never be incinerated. Seek approval through the chain of command before operating field-expedient devices, such as the inclined-plane burner that is described below.

6-29. The inclined-plane burner that is described in chapter 3 and shown in figure 3-3, page 3-14, is currently the best available, field-expedient means to treat and destroy medical waste, including sharps. It can accommodate the waste for a combat support hospital or similar-size unit. The waste feed to the inclined-plane burner should be mixed at approximately 10 percent, by weight, medical waste (to include sharps) to 90 percent, by weight, of regular trash. This mixture will help ensure the hottest and cleanest burn possible. Burning should be avoided when the wind will blow the resulting smoke toward the base camp or other inhabited areas. Depending on the guidance established for the theater of operations, if the ash does not contain any sharps and has been evaluated for hazardous qualities, it can be buried with other SW. If it is determined to be hazardous, it will be managed as HW. If it is nonhazardous but contains sharps, it will be placed in 55-gallon drums that will be retrograded to an approved landfill when filled. A retrograde shipment of drums containing this ash is not considered a hazmat shipment. If retrograding sharps is not an option, they may be buried below scavenger depth (approximately 8 feet), preferably in conjunction with sterilization or grinding.

6-30. Soldiers involved in the actual burning of medical waste must wear skin protection and respiratory protection. An air-purifying respirator (cartridge or canister) with a high-efficiency particulate air filter is recommended. Paper surgical masks do not protect from hazards inherent in the burning of waste and should not be substituted for an air-purifying respirator. Wearing a Soldier's personal protective mask is also not recommended. Though a Soldier's personal protective mask is equipped with a high-efficiency particulate air filter, it is best used to protect the Soldier against chemical and biological attacks.

6-31. An alternative to the incineration of sharps is the use of Isolyzers®. Isolyzers use a state-of-the art needle disposal system. Large, 1- to 2.5-gallon containers filled with a liquid polymer resin are used as sharps receptacles. When the container is full, two chemicals are added to the liquid that generates a chemical reaction which heats the contents and then solidifies it into a solid mass. Once the chemical reaction is completed, the container is no longer a biohazard and may be disposed of as SW.

Sterilization

6-32. Steam sterilization, also known as *autoclaving*, is an alternative to the incineration of medical waste. Ensure that the waste is secured in autoclave bags (regular plastic bags may melt) before placement in the sterilizer. Autoclave indicator tape, if available, will show when sterilization is complete. The minimum operational temperatures and detention times are: 250°F for 90 minutes at 15 pounds per square inch gauge pressure, 272°F for 45 minutes at 27 pounds per square inch gauge pressure, or 320°F for 16 minutes at 80 pounds per square inch gauge pressure. After the medical waste is sterilized and cooled, the waste may be managed as regular trash. Ensure that care is taken when handling the waste to prevent needle sticks. Field sterilizers that are used to autoclave medical waste should never be used to sterilize other medical items (such as surgical packs) and should be permanently and indelibly marked with "FOR MEDICAL WASTE ONLY—DO NOT USE FOR STERILIZATION" or words to that effect. Units relying on a field sterilizer to sterilize waste should establish a contingency plan since field sterilizers tend to break down with extensive use. Autoclaves should be regularly tested, using bacterial spores, to ensure that they are functioning properly. Table 6-2 contains product ordering information for portable steam sterilizers and various other medical waste disposal products.

Table 6-2. Medical-waste disposal products

NSN	*Item*
6530-01-107-5799	Biohazard bags, 26 by 18 inches per package of 200 (autoclavable)
6530-01-107-5798	Biohazard bags, 36 by 24 inches per package of 100 (autoclavable)
6530-01-294-2865	Sharps containers (small)
6530-01-274-5099 6530-01-183-2863	Sharps containers (medium)
6530-01-484-1593	Sharps containers (large)
6530-00-477-6720	Bacillus stearothermophilus spore strips
6840-00-753-4797 7930-01-378-4561 7930-01-379-5269 7930-01-379-5692	Disinfectant, germicidal fungicidal concentrate (nonphenolic type)
7930-01-378-4564	Disinfectant, Germicidal Fungicidal Concentrate (phenolic type)
6530-01-340-8001 6530-01-142-8235 6530-01-137-8475	Sterilizers Portable, counter-top installed sterilizers (inside dimensions: width by length by height) 16 inches by 26 inches by 16 inches 20 inches by 38 inches by 20 inches
Legend: NSN national stock number	

Retrograding

6-33. If use of a medical waste incinerator or sterilization is not possible, medical waste may have to be retrograded to a sustainment area where the appropriate facilities are available. These movements must be coordinated with higher headquarters to ensure compliance with any governing international agreements.

Burial

6-34. The last resort is burying untreated medical waste in a sanitary landfill located in an area with a low water table. Medical waste must be buried below 8 feet to prevent scavenging. A layer of lime may be placed over the waste prior to burial to accelerate decomposition and provide a measure of chemical disinfection. Medical waste burial sites must be marked and grid locations reported through the chain of command to facilitate the unlikely requirement that it will have to be recovered in the future.

Alternative Methods

6-35. If connected to a suitable wastewater treatment plant, properly treated bulk blood or blood products may be poured into clinical sinks.

This page intentionally left blank.

Appendix A

Waste Streams

This appendix provides a graphical decision aid to facilitate waste management planning. It is intended as a planning tool and relies on the user's thorough understanding of the material presented throughout this manual.

WASTE SOURCES

A-1. As discussed in chapter 2, waste management planners use the 6-step process for developing a waste management plan. As part of step 1 (analyze the situation), waste management planners analyze the unit's waste streams by focusing on the type, size, and functions of units. Figure A-1, page A-2, shows some of the unit functions and activities that are typically performed in supporting an operation and tend to be the primary sources of most waste streams. The waste items that are listed within each function are not all-inclusive and will depend largely on the types of materials being consumed by the unit. As planners determine the waste items that will likely be generated, they then must categorize the waste.

WASTE CLASSIFICATION

A-2. After determining the waste items that are generated, based on the unit functions and activities being performed (see figure A-1, page A-2), waste management planners use the flowcharts shown in figure A-2, page A-3, and figure A-3, page A-4, to classify the waste as one of the six primary types of waste, which are—

- Nonhazardous SW (see chapter 3).
- Gray water (see chapter 4).
- Black water (see chapter 4).
- HW (see chapter 5).
- Special waste (see chapter 5).
- Medical waste (see chapter 6).

Maintenance

- Used oil/filters
- Waste fuel/filters
- Used antifreeze
- Used transmission fluid
- Used brake fluid
- Contaminated soil
- Used absorbent
- Rags (oil and grease)
- Used batteries
- Paint-related waste
- Spent solvents (parts cleaning)
- Spill residue
- Asbestos brake shoes
- Used/scrap parts
- Parts packaging material
- Used office supplies
- Gray water (vehicle washing)

Administration and all others

- Used office supplies
  - Paper
  - Printer/copier supplies
  - Light bulbs
  - Compact discs
- Used batteries
- Obsolete electronic equipment
  - Computers
  - Monitors

Supply and Services

- Spill residue and waste fuel resulting from refueling operations
- Expired HM
- Nonreparable TA-50 and uniforms
- Packaging materials (cardboard boxes and plastic wrapping)
- Bulk MRE heaters
- BondCote tent-canvas
- Used office supplies

Food Services

- Food scraps
- Kitchen grease
- Dishwashing water (gray water)
- Used food & beverage containers
  - Aluminum
  - Plastic
  - Paper
  - Cardboard

Sanitation and Hygiene

- Human waste (black water)
- Showers (gray water)
- Laundry (gray water)

Medical Treatment

- Medical waste
- Expired medications
- Used batteries
- Used office supplies
  - Paper
  - Printer/copier supplies
  - Light bulbs
- Obsolete electronic equipment
  - Computers
  - Diagnostic equipment
- Packaging materials

Construction and Deconstruction

- Contaminated soil
- Asbestos
  - Roof tiles
  - Pipe insulation
  - Floor tiles
- Used/unused building materials
  - Lumber
  - Bricks
  - Wiring
  - Pipes
  - Glass

Legend:

HM – hazardous material
MRE – meals, ready to eat
TA – table of allocation

Figure A-1. Sources of waste for unit functions and activities

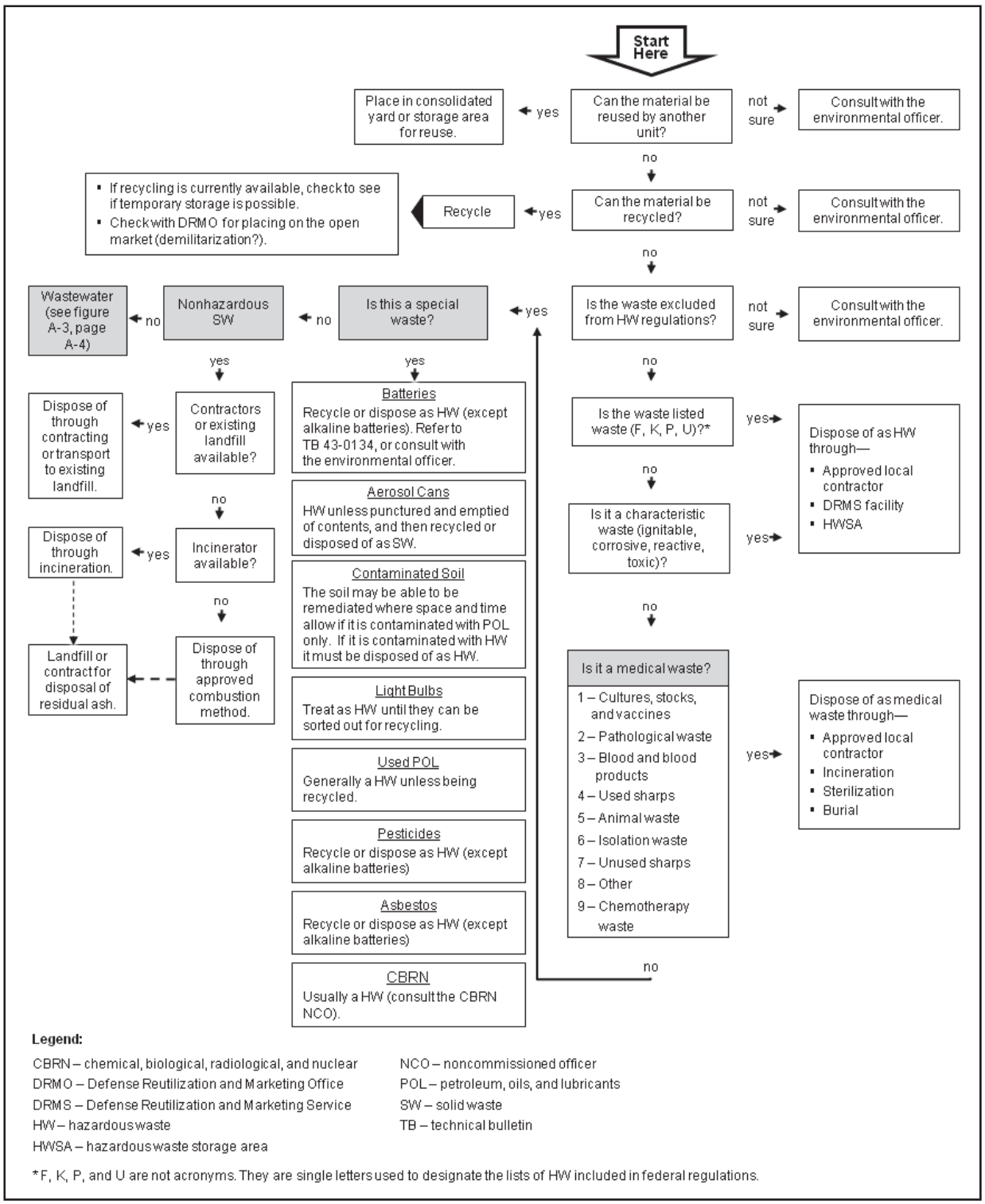

Figure A-2. Waste classification flowchart

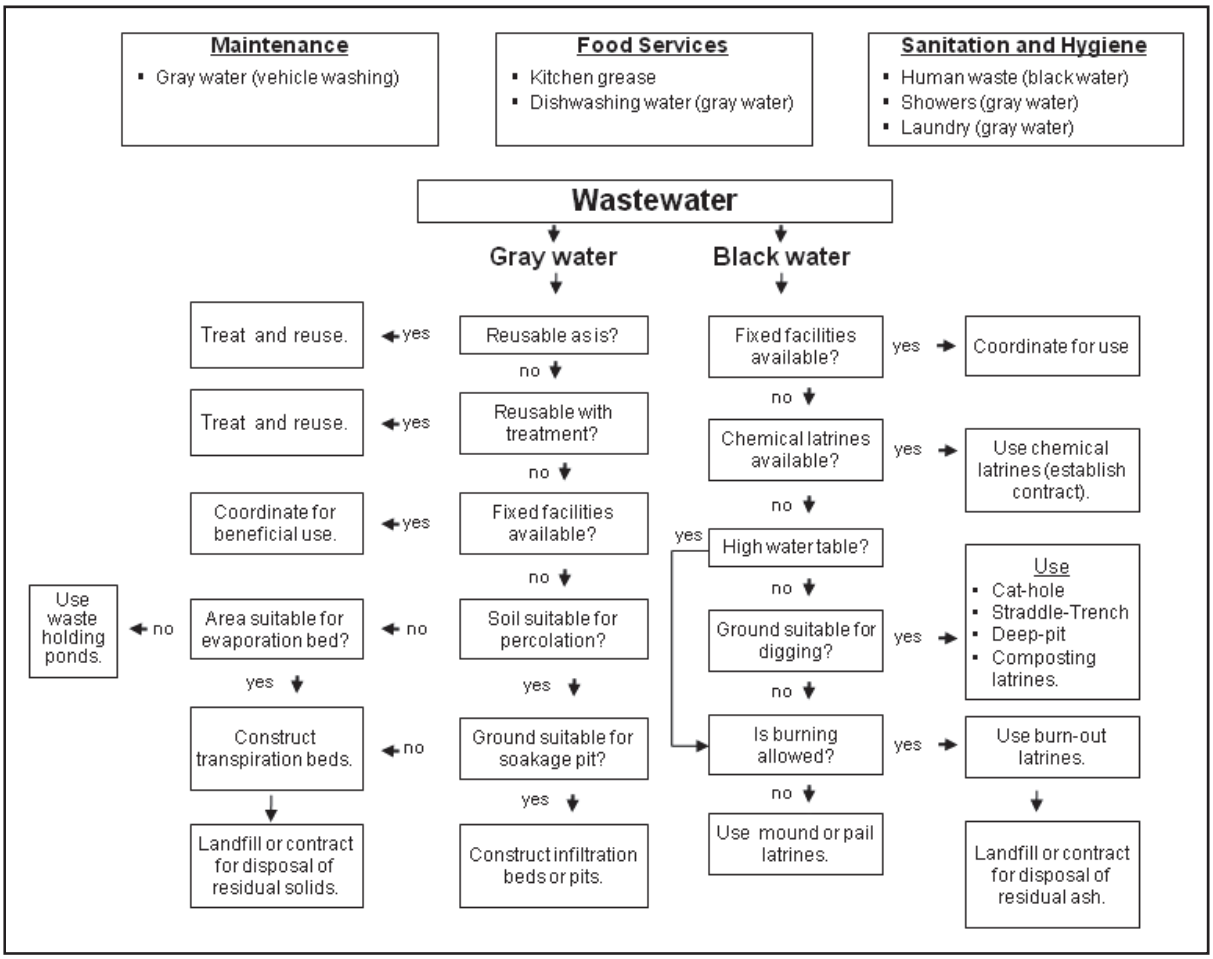

Figure A-3. Wastewater flowchart

Appendix B

Sample Waste Management Appendix

This appendix provides guidelines for creating a waste management appendix that may be part of the engineer or sustainment annexes used within Army operation plans and orders. Refer to ADP 5-0 for more information on planning and orders.

GENERAL GUIDELINES

B-1. Operation plans and orders are critical components to mission command. They foster mission command by clearly conveying the commander's intent, assigning tasks and purposes to subordinates, and providing the minimum coordinating measures necessary to synchronize the operation. To maintain clarity and simplicity, operation plans and orders include attachments (annexes, appendixes, tabs, and exhibits). Attachments contain information, administrative support details, and instructions that expand upon the base order; and they are used only when necessary and only when they pertain to the entire command. Appendixes contain information necessary to expand annexes and enable subordinate unit planning and successful mission execution.

B-2. The waste management appendix aims at unifying the waste management effort applied at the various echelons. It can be part of the engineer annex or the sustainment annex, depending primarily on the echelon and how the waste management functional area is organized within the staff.

B-3. The sample waste management appendix shown in figure B-1, page B-2, follows the five-paragraph format for attachments prescribed in ADP 5-0 and should be used as a guideline. The waste management appendix can include any combination of text, matrices, and graphics to best communicate information to subordinates. Though the content may vary based on unit SOPs and unit skill level, the waste management appendix should meet the following general criteria:

- Contain all critical information and tasks pertaining to the waste management effort not covered elsewhere in the order.
- Does not contain items covered in SOPs, unless the mission requires a change to the SOP.
- Provide information that is clear and concise.
- Include only information and instructions that have been fully coordinated in other parts of the plan or order.

RESPONSIBILITIES

B-4. The engineer staff officer, environmental officer, G-4/S-4, and other waste management planners within the staff must work together to effectively integrate the necessary information to perform waste management. As the primary staff integrator for waste management, which is part of the environmental program, the senior engineer staff officer ensures that the optimal amount of information and the necessary tools that subordinate units will need for waste management planning and execution is provided in operation plans and orders. The information needed is generated by various staff elements, such as environmental, PVNTMED, logistics, and others. The engineer staff officer is responsible for collecting and consolidating the necessary information into the waste management appendix and ensuring that the information and instructions are consistent with other information contained throughout the operation plan or order.

[Classification]

(Place the required classification at the top and bottom of every page of the appendix.)

Copy ## of ## copies

Issuing headquarters

Place of issue

Date-time group of signature

Message reference number

Include heading if attachment is distributed separately from the base order or higher-level attachment.

APPENDIX __ (WASTE MANAGEMENT) TO ANNEX _____ TO OPERATION PLAN/ORDER NO___.

References:

Time Zone Used Throughout the Order:

1. SITUATION. Include information affecting waste management operations that is not covered in the base order or the engineer or sustainment annexes.

a. Area of Interest. Refer to Annex B (Intelligence) as necessary.

b. Area of Operations. Refer to Appendix 2 (Operations Overlay), Annex C (Operations), as necessary.

(1) Terrain. Describe how the terrain will impact waste management operations. Refer to Tab A (Terrain), Appendix 1 (Intelligence Estimate), Annex B (Intelligence), as necessary.

(2) Weather. Describe how weather will impact waste management operations. Refer to Tab B (Weather), Appendix 1 (Intelligence Estimate), Annex B (Intelligence) as necessary.

c. Enemy Forces. Describe how the enemy will impact waste management operations. Refer to Annex B (Intelligence) as necessary.

d. Friendly Forces. Outline the higher headquarters plan as it pertains to waste management operations. List higher, adjacent, and other functional area assets that support or impact the issuing headquarters waste management capabilities or require coordination and additional support.

e. Interagency, Intergovernmental, and Nongovernmental Organizations. Identify and describe other organizations in the area of operations that may impact waste management operations.

f. Civil Considerations. Describe the impacts of civil considerations on waste management operations. Refer to Annex K (Civil Affairs Operations) as necessary.

g. Attachments and Detachments. List waste management assets, attached or detached, only as necessary to clarify task organization.

h. Assumptions. List any waste management-specific assumptions that support the annex development.

2. MISSION. State the waste management mission in support of the operation.

[Classification]

SAMPLE

Figure B-1. Sample waste management appendix

[Classification]

3. EXECUTION.

a. Scheme of Support. Describe how waste management tasks support the commander's intent and concept of operations. State waste management priorities of effort and priorities of support (by unit or area) for each phase of the operation. Supplement the concept of sustainment (paragraph 4 of the base order) with any additional information that clarifies waste management tasks and purposes. The four major activities of waste management (collect, transport, recover, and dispose) may be used to structure this narrative.

b. Tasks to Subordinate Units. List waste management tasks assigned to specific subordinate units not contained in the base order.

- AA Patriot (immediate category): Construct field expedient latrines to accommodate black water requirements according to the unit waste management SOP. Prepare a closure plan to close the latrines before movement.
- FOB Baker (basic category): Establish contracts for the placement and servicing of chemical latrines that will accommodate 600 males and 200 females for a minimum of 90 days.
- Camp Lancer (expanded category): Ensure a HWAP is properly established and managed according to TM 3-34.56 and UFC 4-451-10N. Disseminate the grid coordinates of the HWAP and all waste transportation procedures to subordinate units.

c. Coordinating Instructions. List instructions that apply to two or more subordinate units not covered in the base order. This may include, but is not limited to—

- Measures for reducing health risks associated with generated waste.
- Measures for preventing pollution.
- Information on waste collection and accumulation sites.
- Disposition or disposal instructions for specific waste items.
- Requirements for waste-related information. Include RFIs that have been submitted to higher and adjacent units that may be relevant to subordinate units planning.
- Channels for contacting support agencies (reachback) for technical assistance.
- Instructions for disseminating waste-related information.

4. SUSTAINMENT. Identify priorities for the sustainment for waste management key tasks and specify additional instructions as required. Describe stockage levels or basic loads for personal protective equipment, waste containers, spill prevention/response materials, and other waste management-related items to be maintained by subordinate units. Describe the appropriate channels for ordering, acquiring (local purchases), and contracting waste management supplies, materials, and services that are not covered in Annex F (Sustainment) as necessary.

5. COMMAND AND SIGNAL.

a. Command. State the location of key personnel involved with waste management.

b. Liaison Requirements. State any waste management liaison requirements not covered in the base order.

c. Signal. Address communications requirements or reports used for managing waste.

ACKNOWLEDGE: Include only if distributed separately from the base order.

OFFICIAL:

[Authenticator's name]

[Authenticator's position]

The commander or the coordinating staff officer responsible for waste management may sign the appendix.

ATTACHMENT: List any tabs as required.

DISTRIBUTION: Show only if distributed separately from the base order or higher-level attachment.

[page number]

[Classification]

SAMPLE

Figure B-1. Sample waste management appendix (continued)

This page intentionally left blank.

Appendix C

Spill Planning, Response, and Reporting

Emergency spill response plans are developed to mitigate the impacts of spills during the accumulation, storage, or transportation of hazmat and HW and special waste. A spill response plan provides the necessary details to allow personnel to appropriately respond to a spill. Spill response plans are required for all base camps and units who are responsible for hazmat, HW, and special waste. Response plans are posted within storage and accumulation sites and are rehearsed to ensure that personnel will respond appropriately.

SPILL PLANNING

C-1. The environmental officer is responsible for developing the spill prevention and response plan.

PREVENTION

C-2. Risk management is the process of detecting, assessing, and controlling risk that arises from operational factors and balancing that risk with mission benefits (see FM 5-19). One of the main goals of risk management is to reduce the level of risk to low or none. Pollution prevention can greatly reduce that risk. The key to pollution prevention is proper planning; for example, plan to build areas to prevent accidental spills and releases.

C-3. Monitoring spill prevention and enforcing spill cleanup standards reduces risks to human health and helps avoid future cleanup costs (in terms of time and money) that will be required upon base camp transfer or closure.

ACCUMULATION AND STORAGE SITES

C-4. Keep hazmat and HW areas clean and orderly to reduce accidents in the storage area and ease the cleanup of spills. Remember to C-H-E-C-K:

- **Containment.** Ensure that secondary containment is used and in good condition. Empty water from the secondary containment on a regular basis. If the collected water shows any obvious signs of contamination (such as a sheen), properly dispose of it at the HW accumulation point.
- **Hazmat and HW locations.** Choose appropriate hazmat and HW locations. Erect warning signs, and keep the areas clean and orderly.
- **Environmental documentation.** Maintain an MSDS for each hazmat, and update the unit SOP and spill response plan regularly. Maintain documentation of waste removal.
- **Containers.** Check the condition of containers, and ensure that they are properly labeled. Keep containers of incompatible materials separated. Keep lids and bungs closed when containers are not in use.
- **Kits.** Place spill, first aid, and emergency response kits near hazmat and HW areas. Ensure that PPE fits and that replacement items are available for the operation.

C-5. The proper location of accumulation and storage sites also reduces the tactical risk of an adversary using chemicals against friendly forces. Consider the following when choosing a location for hazmat and HW areas:

- Locate hazmat and HW areas away from living areas, bunkers, ammunition storage facilities, outer perimeter fence lines, and dining facilities.
- Develop hazmat areas near locations where they will be used.
- Develop HW areas near generation points to reduce the potential for a spill.

MATERIAL SAFETY DATA SHEETS

C-6. Maintain MSDSs (see appendix E) as follows:

- Keep an MSDS for each hazmat stored or collected in hazmat and HW areas.
- Ensure that MSDSs are readily available to all unit members.
- Review MSDSs before accepting unfamiliar hazmat.
- Know the personal protective requirements for each hazmat used.
- Keep copies of the unit environmental SOP and spill response plan in hazmat and HW areas.

COMPATIBILITY OF MATERIALS

C-7. Different classes of hazmat and HW are required to be stored and disposed of separately. MSDSs describe the classifications of hazmat. Four common classifications are—

- Flammable (fuels).
- Corrosive (acids).
- Reactive (explosives).
- Toxic (insecticides).

SECONDARY CONTAINMENT

C-8. All liquid hazmat and HW must have secondary containment. In order to effectively contain a spill, the secondary containment should—

- Hold 10 percent of the total hazmat and HW stored or 110 percent of the largest container.
- Contain a seamless, ultraviolet-resistant plastic liner. As a field-expedient method, containers can be placed on a large plastic tarp with sandbags stacked around the perimeter, the edges of the tarp draped over the top of the sandbags, and the tarp folded back into the storage area. Specialized secondary containment pallets or systems are available through the supply system and should be used as base camps become more enduring.
- Provide overhead cover to protect containers from the elements and prevent rainwater from accumulating in the secondary containment system.

SPILL RESPONSE

C-9. While good hazmat and HW management practices minimize the chance of spills, accidents will still happen. When they do, it is imperative that personnel are trained and prepared to mitigate the damage and to clean up the spills as quickly, safely, and effectively as possible.

SPILL RESPONSE PLAN

C-10. A spill response plan must be available for each operation. The following organizations should have a copy of this plan: tactical refueling, maintenance, and hazmat/HW accumulation and transportation. The plan should address, at a minimum, site-specific response procedures and spill response equipment requirements for each major operation. A sample spill prevention and response plan is shown in figure C-1, page C-3.

[Classification]

SPILL PREVENTION AND RESPONSE PLAN

1. SITE MAP. Include a map or sketch of the site and surrounding area.

2. SITE DESCRIPTION. Describe and/or highlight important facilities or areas on the site map, to include:

- Vulnerable areas (such as work and billeting areas) that may need to be evacuated in the event of a spill or release.
- Environmentally sensitive areas (such as drainage systems and water protection areas) that must be avoided, based on predicted drainage patterns.
- Location of key personnel (when on and off duty).
- Location of emergency response services, such as fire, police, and medical.

3. RESPONSIBILITIES. Provide the name, title, responsibilities, duties, and contact information for those who have a role in spill prevention and response. Address procedures for inspecting the site for prevention and control deficiencies (frequency of inspections and inspection checklists). Include monitoring requirements for the early detection of spills.

a. Subordinate Units and/or Chain of Command.

b. Facility Incident Commander and Alternate.

c. Environmental Officer.

d. Storage or Accumulation Site Manager and Alternate.

e. Facility (Site) Response Team Coordinator.

f. Facility (Site) Response Team. Include the name, emergency contact information, and location (building/tent/bunk number) for each team member.

g. Emergency Response Contact Information. Provide the necessary information for contacting fire, police, and emergency medical services.

4. SITE MATERIAL INVENTORY.

5. SITE SPECIALIZED RESPONSE.

- Specific procedures and resources to be used to contain and clean up spills.
- Immediate response actions that must be taken once a spill is discovered.
- Communication plan to notify spill response team members and emergency services of a spill.
- Procedures and techniques to use to contain, clean up, and remediate spills.
- Procedures for the proper disposal of recovered hazmat and contaminated absorbent materials.
- Steps to be accomplished before resuming operations at the site.

6. SITE EVACUATION PLAN.

- Describe signals (primary and alternate) to be used to initiate evacuation.
- Describe evacuation routes (primary and alternate) and designated assembly points.

TABS: (as necessary)

DISTRIBUTION:

[Classification]

SAMPLE

Figure C-1. Sample spill prevention and response plan

C-11. The spill response plan is updated periodically or whenever there is a significant change in the situation, such as changes in responsibilities, procedures, use of equipment, or base camp or site layout.

SPILL RESPONSE PROCEDURES

C-12. In the event of a hazmat or HW spill, the procedures listed below must be implemented immediately by trained personnel within the unit. Personal safety must never be compromised during the response. If the situation exceeds unit capabilities, evacuate the area, inform the chain of command, and contact the local hazmat spill response team or local fire department if one exists. Emergency telephone numbers or radio frequencies should be obtained and distributed throughout the unit, as necessary, before the operation begins. Personnel should—

- **Step 1.** Protect themselves and other personnel. Sound the alarm, give a verbal warning, or contact emergency response personnel as appropriate. Have another person call for assistance while efforts are made to contain the spill. Evacuate all nonessential personnel from the immediate area, as necessary, based on the material spilled. Use the required PPE as detailed on the MSDS for the spilled material. Extinguish smoking materials and all sources of ignition. Turn off power if there is the possibility of fire. Ventilate the area.
- **Step 2.** Stop the flow if possible to do so safely. The flow of hazmat and HW must be stopped at the source to control the spill. This may be as simple as placing the container upright or closing a valve. In the event of a flammable material spill, use only nonsparking tools and ensure that metal-to-metal contact is avoided.
- **Step 3.** Contain the spill. The purpose of this step is to prevent the spread of contamination. This can be achieved by placing drip pans where the material contacts the soil, constructing earth berms or placing sandbags around the contaminated area, or placing absorbent material in the area of the spill. Divert the flow, if necessary, to prevent it from entering storm or sewer drains or other waterways.
- **Step 4.** Report the spill. Notify the chain of command and unit environmental officer immediately. A sample spill report is shown in figure C-2, page C-5. A more detailed written report is prepared after cleanup is completed.
- **Step 5.** Clean the spill. Equipment used to clean a spill must be chosen carefully. Use only nonsparking tools if the material is flammable or explosive. For corrosive materials, use equipment that will not corrode or deteriorate, such as nonmetallic equipment. Collect used absorbent and contaminated soil in plastic bags, and transfer the bags into a labeled, sturdy container to be disposed of as HW.
- **Step 6.** Prepare and submit a detailed written report through the chain of command.
- **Step 7.** Replace spill response equipment. Obtain replacement spill response equipment through the unit supply channels to ensure that personnel can properly respond in the event of subsequent spills.

Line 1–Date and time	DTG
Line 2–Reporting unit	Unit making the report
Line 2A–Reporting POC	Rank, first name, and last name
Line 2B–Reporting e-mail	AKO or theater e-mail account
Line 2C–Reporting phone	DSN, voice, DNVT, or commercial
Line 3–DTG of discovery	DTG of spill discovery
Line 3A–DTG of spill	DTG
Line 4–Material spilled	JP-8, MOGAS, oil, solvent, other, or unknown
Line 5–Quantity spilled	Quantity of spilled material, in gallons
Line 5A–Type of surface	Unknown, bare soil, concrete, or asphalt
Line 5B–Type of Containment?	Was spill contained? Yes, No, or Unknown.
Line 6–Location	UTM or eight-digit grid coordinates with MGRS grid zone designator of spill
Line 6A–Base camp	Base camp name
Line 7–Cause	Accident, enemy fire, or negligence
Line 8–Size of area affected	Size of affected area, in square feet
Line 9–Hazards to environment	Did the spill cause any potential damage to environmental receptors, such as parks, forests, monuments, wildlife preserves, or waterways (irrigation canals, rivers, lakes, or water wells)?
Line 10–Hazards to personnel	Did the spill pose any obvious and immediate threat to the safety of personnel (such as exposure to strong fumes, fire hazards, or contaminated food or drinking-water sources)?
Line 10A–Personnel injuries	Did the spill result in any injuries to personnel? Yes, No, or Unknown.
Line 11–Actions	Remediated spill, none, or unknown
Line 12–Responsible unit	Supervising unit POC
Line 12A–Responsible POC	Rank, first name, and last name
Line 12B–Responsible e-mail	AKO or theater e-mail account
Line 12C–Responsible phone	DSN, voice, DNVT, or commercial
Line 13–Assistance	Assistance required or requested? Yes, No, or Unknown.
Line 14–Narrative	Brief summary of the spill events.

Legend:

AKO	Army Knowledge Online
DSN	Defense Switched Network
DNVT	digital nonsecure voice terminal
DTG	date-time group
JP-8	jet propulsion fuel grade 8
MGRS	Military Grid Reference System
MOGAS	motor gasoline
POC	point of contact
UTM	Universal Transverse Mercator

SAMPLE

Figure C-2. Sample spill report

SPILL RESPONSE EQUIPMENT

C-13. Spill response equipment is essential to protecting the environment in the event of a hazmat or HW spill. The type and amount of spill response equipment needed depends on the operation. Units may also need to acquire hydrophobic-absorbent materials for operations conducted in areas susceptible to large amounts of precipitation.

Tactical Refueling Operations

C-14. Tactical refueling operations are limited to the handling of fuel products, such as diesel and gasoline. The extent of the operations and load-carrying capabilities of fuel tankers and heavy expanded mobile tactical trucks restrict the amount and type of spill response equipment needed. In the event of a major spill during refueling operations, personnel primarily need two nonsparking picks and two nonsparking shovels to excavate contaminated soil and several large, plastic bags to contain the excavated soil for disposal as HW. Approximately 10 pounds of absorbent and several small, plastic bags are sufficient to respond to small-volume spills on a hardstand. Additional resources may be obtained through supply channels, as required.

Field Maintenance Operations

C-15. Field maintenance operations deal with all Class III items. Repeated small-volume spills are indicative of field maintenance operations. Approximately 25 pounds of absorbent; two nonsparking shovels; two brooms; and several small, plastic bags for contaminated absorbent are sufficient to maintain field maintenance operations during operations. Additional resources may be obtained through supply channels, as required.

Hazmat Storage and HW Accumulation Operations

C-16. Hazmat storage and HW accumulation operations deal with all Class III items. Leaking containers and small-volume spills are indicative of field hazmat storage or HW accumulation operations. Approximately 15 pounds of absorbent; two nonsparking shovels; two brooms; and several small, plastic bags for contaminated absorbent are needed at each storage area. Additional resources may be obtained through supply channels, as required.

HW and HW Transportation

C-17. Hazmat and HW transportation operations deal with several classes of supply in different-size containers. Leaking containers and small-volume spills are indicative of HW transportation operations; however, the potential exists for large-volume spills in the event of an accident. Each approved vehicle for hazmat or HW transportation should maintain approximately 25 pounds of absorbent; two picks; two nonsparking shovels; one broom; and several small and large, plastic bags for contaminated soil. Additional resources may be obtained through supply channels, as necessary.

SPILL CLEANUP PROCEDURES

C-18. The steps taken to clean up after a spill will vary depending on the material that was spilled. The MSDS will provide vital information regarding PPE, materials incompatible with the spill substance, and suggestions for spill response and cleanup. Check the MSDS before responding to a spill.

SPILL CLEANUP FOR FLAMMABLE AND COMBUSTIBLE ORGANIC LIQUIDS

C-19. Follow the spill cleanup procedures below for flammable and combustible organic liquids:

- Respond to the spill.
  - Keep flammable liquids away from any potential heat, spark, or flame.
  - Use proper PPE.
  - Enclose spilled combustible liquid with a dike of sawdust or solid absorbent.

  - Use foam (such as aqueous film forming foam), if available, and pump free liquid into a suitable container. Use an intrinsically safe pump if available.
  - Use another type of absorbent if free liquid cannot be collected, such as sawdust, cat litter, soil, or other solid absorbent material.
  - Wash all clothing after use, and have the equipment cleaned before reuse.
- Clean up the spill. Use enough absorbent to soak up all the spilled liquid. Since most organic liquids are flammable, avoid all sources of ignition or sparking. Scoop up spent solid absorbent with a nonsparking shovel. Place absorbent in the proper waste container.
- Contain the spill. Use a metal or plastic drum to containerize spill residue.
- Use PPE. Vapors heavier than air tend to accumulate in low places. Avoid having flammable vapors come in contact with ignition sources to prevent flashback. Persons involved in cleaning up a spill must wear the following PPE:
  - Rubber or neoprene, 46 centimeter, gauntlet gloves.
  - Rubber or neoprene apron.
  - Rubber, high-top shoes or overshoes.
  - Disposable coveralls.
  - Protective mask.
  - Full face shield (when not wearing a mask and still working with open chemicals).
- Use fire extinguishers (carbon dioxide or dry-chemical). In case of fire, call the fire department. Cool nearby drums with a stream of water to prevent ignition and the possibility of pressure increase in the containers.
- Respond to emergencies.
  - Move the victim to fresh air, and provide basic first aid. Have someone call for emergency assistance. Determine what chemicals were involved in order to aid emergency personnel with first aid treatment.
  - Remove contaminated clothing. Wash the victim's skin for 15 minutes by having the victim stand under an emergency shower. Transport the victim to the nearest medical clinic or hospital.
  - Flush the victim's eyes for 15 minutes using an eye-wash unit if the chemical got in the victim's eyes. Transport the victim to the nearest medical clinic or hospital.
  - Be prepared to tell the doctor what chemicals are involved.

SPILL CLEANUP FOR ACIDS

C-20. An acid is any substance with a pH of 2.5 or lower. A small amount of spilled acid (a gallon or less) can be safely neutralized. Follow the spill cleanup procedures below:

- Respond to the spill.
  - Stay upwind.
  - Use proper PPE.
  - Enclose spilled acid with a dike of solid absorbent, absorbent socks, or pads.
  - Do not add water to acid.
  - Wash all clothing after use, and have the equipment cleaned before reuse.
- Neutralize the spill. Add sodium bicarbonate (such as baking soda) to the liquid acid spill until it is completely covered. Test with pH paper for a pH reading of 6 to 8. Continue to add sodium bicarbonate until the desired pH is reached.
- Clean up the spill. Add sawdust, clay, or dry sweep until the acid and sodium bicarbonate are completely covered. Scoop up spent solid absorbent material with a nonsparking shovel that has a long handle, and scoop up the contaminated soil. Place spent waste in the proper container.
- Contain the spill. Use plastic or rubber containers for the spent waste.
- Use PPE. Personnel involved in cleaning up an acid spill must wear the following PPE:
  - Rubber or neoprene, 46 centimeter, gauntlet gloves.

  - Rubber or neoprene apron.
  - Rubber, high-top shoes or overshoes.
  - Long-sleeve shirt.
  - Protective mask.
  - Full face shield (when not wearing a mask and still handling a spill).
- Use fire extinguishers. Use dry chemical or carbon dioxide extinguishers, as necessary.
- Respond to emergencies.
  - Be aware that acids can cause burns to the skin and eyes upon contact. It may also be harmful if inhaled or swallowed.
  - Move the victim to fresh air. Have someone call for emergency assistance immediately. If a person ingests acid or breathes acid fumes, transport the victim to the nearest medical clinic or hospital at once.
  - Remove contaminated clothing. Transport the victim to a shower point, and wash the victim's skin for 15 minutes by having him stand under the shower. Transport the victim to the nearest medical clinic or hospital.
  - Flush the victim's eyes for 15 minutes using an eye-wash unit, if a chemical got in the victim's eyes. Transport the victim to the nearest medical clinic or hospital.
  - Be prepared to tell the doctor what chemicals are involved.

Note. If a large amount of acid is spilled, request assistance from emergency responders or personnel properly trained to respond to chemical spills. The use of respirators may be necessary for response—personnel must be properly trained, have undergone a pulmonary fitness test, and been fit tested to use respirators.

SPILL CLEANUP FOR CAUSTICS

C-21. A caustic is any substance with a pH greater than 12. It is imperative to review the MSDS for caustics. Some strong caustics, such as sodium hydroxide, have a violent reaction with water. If caustic materials are used, ensure that a spill kit specifically designed for caustic cleanup is on hand. If the caustic material is liquid and a large spill, evacuate the area and request assistance from trained emergency response personnel. If the spill (liquid, solid, powder, pellet, or flake) is small (a gallon or less) follow the spill cleanup procedures below:

- Respond to the spill.
  - Stay upwind and away from low areas.
  - Use proper PPE.
  - Enclose spilled caustic with a dike of solid absorbent (sawdust, vermiculite, or clay).
  - Wash all clothing after use, and have the equipment cleaned before reuse.
- Neutralize the spill. A weak acid, such as acetic acid or diluted hydrochloric acid, can be added to the spilled liquid caustic. If the spilled caustic is a solid, powder, pellet, or flake, clean it up by containerizing as much of the material as possible, then add water to the remaining material. Test with pH paper for a pH reading of 6 to 8. If needed, acetic acid or diluted hydrochloric acid may be added until the correct pH is reached.
- Clean up the spill. Add more absorbent if necessary. Scoop up spent solid absorbent material with a nonsparking shovel or scoop that has a long handle. Place the absorbent in the proper spent-waste container. The waste container should be properly color-coded and labeled "CAUSTIC WASTE."
- Contain the spill. Use plastic or rubber containers for the spent waste.
- Use PPE. Spilled caustics are very slippery. Care must be taken to avoid falls. Personnel involved in cleaning up spills must wear the following protective clothing and equipment:
  - Rubber or neoprene, 18 inch, gauntlet gloves.
  - Long-sleeve shirt.
  - Rubber or neoprene apron.

  - Rubber, high-top boots or overshoes.
  - Disposable coveralls.
  - Full face shield (when a respirator is not being worn and still working with open chemicals).
  - Respirator with filter cartridges appropriate to the material (for mists or fumes).
- Use fire extinguishers. Use water spray (if appropriate), dry chemical, or carbon dioxide, as necessary.
- Respond to emergencies.
  - Be aware that caustics and alkalis can cause burns to the skin and eyes upon contact and can be harmful if inhaled or swallowed.
  - Move the victim to fresh air. Have someone call for emergency assistance if the victim comes in contact with the chemicals so that firefighters or emergency medical personnel can assist with first aid treatment. Transport the victim to the nearest medical clinic or hospital. If the victim ingests a base or breaths caustic fumes, transport the victim to the nearest medical unit or hospital at once.
  - Remove the victim's contaminated clothing. Wash the victim's skin for 15 minutes by having the victim stand under an emergency shower. Transport the victim to the nearest medical clinic or hospital.
  - Flush for 15 minutes using an eye-wash unit if a chemical got in the victim's eyes. Transport the victim to the nearest medical clinic or hospital.
  - Be prepared to tell the doctor what chemicals are involved.

SPILL RESPONSE SUPPLIES

C-22. At a minimum, units deploy with enough spill response supplies (such as drums, overpack barrels, and absorbent material) to contain 10 percent of their POL and hazmat inventory or to handle a spill from the largest container being used (see table C-1.)

Table C-1. Spill response ordering information

NSN	*Description*
Sweeping Compound	
7930-00-132-5265	100-pound container, contents include sawdust and sand
7930-00-633-9849	100-pound container, contents include sawdust and sand
7930-01-090-9831	1-gallon container of sand
Oil Sorbent	
9330-01-013-3105	Boom form, minimum diameter of 8 inches, minimum length of 8 feet, reusable capability of at least five times
9330-01-308-5150	Sheet form, 100 per package, 18 inches long and 18 inches wide
9330-01-281-0337	Boom form, 4 per package, 10 feet by 8 inches
Shovels	
5120-00-222-4505	Nonsparking hand shovel
5120-00-222-4506	Nonsparking hand shovel

This page intentionally left blank.

Appendix D

Reachback Points of Contact

This appendix provides contact information (see table D-1) for key supporting agencies that can provide assistance in conducting waste management operations.

D-1. The UROC provides reachback engineering capability that allows deployed forces to talk directly with experts in the United States when a problem in the field needs quick resolution. The UROC responds to incoming requests for technical engineering support. (FFE and teleengineering are discussed in chapter 1). The NAVFAC provides reachback support to the Navy and Marine Corps in a similar manner as the nondeployable UROC does for the Army.

D-2. The USAPHC provides worldwide scientific expertise and services in clinical and field PVNTMED, environmental and occupational health, disease surveillance, toxicology, and related laboratory sciences. The USAPHC mission is described further in chapter 1.

Table D-1. Reachback points of contact

Organization	*Contact Information*
Army	
UROC	• Commercial: (601) 634-2439 • DSN: (312) 446-2439 • E-mail: <uroc@usace.army.mil> • Secure e-mail: <uroc@usace.army.smil.mil> • Secure Web site: <http://uroc.usace.army.smil.mil> • Nonsecure Web site: <https://uroc.usace.army.mil>
UROC Mobile (Alabama)	• Commercial: (251) 690-2039 • DSN: (312) 457-2039
UROC Vicksburg	• Commercial: (601) 634-2735/3485 • DSN: (312) 446-2735/3485
UROC VTC support	• Commercial: (601) 634-3485 • DSN: (312) 446-3485 • Web site: <uroc-vtc@usace.army.mil>
USAPHC	• Commercial: (800) 222-9698 • CONUS DSN: 584-4375 • OCONUS DSN: (312) 584-4375 • Web site: <http://phc.amedd.army.mil/Pages/default.aspx>
Navy	
NAVFAC	• Commercial: (202) 685-9218 • Contact: <https://portal.navfac.navy.mil/portal/page/portal/navfac/NAVFAC_CONTACTUS_PP> • Secure Web site: <https://portal.navfac.navy.mil/portal/page/portal/navfac/> • Naval Facilities Engineering Command ATTN: Contingency Engineering Group 1322 Patterson Avenue Southeast, Suite 1000 Washington, DC 20374-5065

Table D-1. Reachback points of contact (continued)

Organization	*Contact Information*

NAVFAC Atlantic	• Commercial: (757) 322-8302 • DSN (312) 262-8302
NAVFAC Pacific	• Commercial: (808) 472-1162
NMCPHC	• Commercial (757) 953-0699 • CONUS DSN 377-0699 • OCONUS DSN (312) 377-0699 • E-mail: <EPM@med.navy.mil> • Secure e-mail (SIPR): <plansops@nehc.navy.smil.mil> • Nonsecure Web site: <http://www.nmcphc.med.navy.mil/>

Legend:

DSN	Defense Switched Network
CONUS	continental United States
NAVFAC	Naval Facilities Engineering Command
NMCPHC	Navy and Marine Corps Public Health Center
OCONUS	outside the continental United States
UROC	U.S. Army Corps of Engineers Reachback Operations Center
USAPHC	U.S. Public Health Command
VTC	video teleconference

Appendix E

Material Safety Data Sheets

MSDSs provide critical information that is used to understand the characteristics of hazmat and HW, safeguard human health, and protect the environment. This information includes the hazardous characteristics of the substance, the appropriate PPE, spill response procedures, signs and symptoms of exposure, and first aid procedures.

PERTINENT INFORMATION

E-1. An MSDS is a summary of information on a given chemical that identifies the material, its health and physical hazards, its exposure limits, and the precautions involved. An MSDS also describes the hazards of a material and provides information on the way the material may be safely handled, used, and stored. This information allows a unit to—

- Protect Soldier health.
- Store materials safely.
- Respond to spills and emergencies quickly and correctly.

E-2. MSDSs are unique for each material and vary, based on the manufacturer (brand name). Manufacturers usually include a current MSDS with their shipments. A sample MSDS for motor fuel is shown in figure E-1, page E-3. It is important that the MSDS on hand is the correct one for the product being used. Binders containing MSDSs for hazmat stored or used on-site must be maintained on-site and made available to personnel for familiarization and in the event of a spill or fire.

E-3. There are various formats for MSDSs; however, typical components (sections) are outlined in Section 1910, Title 29, Code of Federal Regulations (29 CFR 1910). Table E-1, page E-10, provides a reference for information typically found in an MSDS. The degree of detailed information and where it is presented within the MSDS may vary based on the manufacturer. Manufacturers tend to withhold certain detailed information that they consider as proprietary, which often results in recommended disposal requirements being very generic (for example, disposal procedures must comply with federal, state, and local regulations). In these instances, waste management planners must seek out additional information from the environmental officer, the higher headquarters, or through reachback.

E-4. Much of the information provided in an MSDS is technical and requires training to fully understand its usefulness. Waste management planners should seek the expertise from environmental officers and others that are hazmat-trained and -certified. Some of the terms used in MSDSs include the following:

- **Flash point.** This is the minimum temperature a substance produces sufficient flammable vapors to ignite. This is especially important information when operating in extremely hot climates (such as deserts). Waste management planners must ensure that storage areas are protected from the heat and that adequate ventilation is provided. Flammable liquids have a flash point less than or equal to 140°F. Combustible liquids have a flash point greater than or equal to 141°F.
- **Flammable limits.** When dealing with flammable gases or liquids, it is important to monitor flammable (or explosive) limits to minimize the potential for fire or explosions. Gas mixtures are only flammable under certain conditions. The upper explosive limit and lower explosive limit describe the richest and leanest flammable mixture (concentration) that is needed for a particular combustible gas to ignite and explode. The lower explosive limit is the concentration when there is not enough fuel to burn. The upper explosive limit is the concentration when there is too much fuel and not enough oxygen to burn. However, being above the upper limit does not ensure safety, since sudden ventilation or exposure to an air source can dilute the concentration into the flammable limit range. Flammable or explosive limits are affected by temperature and pressure.

Higher temperatures result in low lower explosive limit and high UEL, while greater pressure increases both values.

- **Hazardous characteristic code.** Though not required by the U.S. Occupational Health and Safety Administration on MSDSs, the HMIRS uses a two-digit alphanumeric hazardous characteristic code to classify materials by their primary hazard characteristic. When used in conjunction with *Storage and Handling of Hazardous Materials*, this code serves as a tool to ensure proper segregation and physical separation of incompatible substances being stored.
- **Vapor pressure.** This is the pressure exerted by a vapor against the sides of a closed container. Higher temperatures can cause more vapor to form. Chemicals with high vapor pressure in a hot environment will exert more pressure, which could result in bulging or explosions.
- **Vapor density.** The density of a gas or vapor can be compared to the density of the ambient atmosphere (dry air equals 1.0). Vapor or gas that is greater in density than the ambient air tends to settle to the lowest point. Those that are close to, or lower than, the density of air tend to disperse in the atmosphere. A substance with a vapor density greater than 1.0 can generate a fire or explosive hazard as a vapor trail that can form and extend beyond the liquid. Flashback can occur if an ignition source is present.
- **Specific gravity.** This is a relative measure that compares the density of a liquid or solid to the density of water (1.0). Chemicals with a specific gravity less than 1.0 will float in water; those with a specific gravity greater than 1.0 will sink. This information is used in determining where to position booms and absorbent materials as part of a spill response.
- **Evaporation rate.** This is the rate that a material will vaporize (change from liquid to vapor). It can be useful in evaluating the health and fire hazards of a material. For example, a substance with a high evaporation rate will readily form a vapor that can be inhaled or explode.
- **Solubility in water.** This is the ability or tendency of a substance to blend or dissolve uniformly in water. It is an important consideration for spill prevention and response. For example, preventing a water-soluble chemical from entering a body of water would greatly reduce the overall cleanup effort.
- **Freezing point.** This is the temperature at which a liquid becomes a solid at normal atmospheric pressure. Some materials must not be allowed to freeze (or melt) to protect their integrity or the product packaging.
- **pH.** The pH scale measures the relative strength (corrosivity) of acid and alkaline (base). Pure water has a pH of 7. Caustic (base) has a pH greater than 7 and acid has a pH less than 7. It is important to know the pH of substances since they may be corrosive or react with incompatible materials. Acid and base should not be stored or used near each other since their accidental combination could generate a great amount of heat and possibly result in an explosion.
- **Appearance, odor, and physical state.** These are basic descriptions of a substance that may be helpful in identifying it or discovering a leak or release. For example, sulfur-based chemicals produce a rotten egg smell; cyanides have a burnt-almond smell; and some ketones and aldehydes have a sickly, sweet smell.
- **Boiling point.** This is the temperature that a liquid changes to a gas. It is an important consideration in determining how a toxic substance will enter the body. For liquids with high boiling points, the most common means of entry is through contact (skin absorption); for low boiling point liquids, it is inhalation.
- **Viscosity.** This is the measure of a fluid's resistance to flow. Engine oil is an example of a highly viscous liquid. The viscosity of a liquid generally decreases as the temperature increases.
- **Volatile organic compounds.** These organic chemicals have a high vapor pressure and easily form vapors at normal temperature and pressure. This term is generally applied to organic solvents, certain paint additives, aerosol spray can propellants, fuels, petroleum distillates, and many other industrial and consumer products, ranging from office supplies to building materials. These compounds present a significant health and environmental concern, and exposure must be minimized through proper controls (ventilation) and the use of PPE.

MATERIAL SAFETY DATA SHEET

SECTION 1 - PRODUCT AND COMPANY IDENTIFICATION

PRODUCT NAME: GASOLINE, UNLEADED

GENERAL USE: Motor fuel

PRODUCT DESCRIPTION: Blend of petroleum distillates, highly flammable. This MSDS covers multiple grades of lead-free and unleaded fuels: regular, premium, extra and oxygenated.

TESORO

MANUFACTURER'S NAME Tesoro Petroleum Companies, Inc.	DATE PREPARED: February 8, 2003 SUPERSEDES: April 18, 2002 Page 1 of 6
ADDRESS (NUMBER, STREET, P.O. BOX) 300 Concord Plaza Drive	TELEPHONE NUMBER FOR INFORMATION Tesoro Call Center (877) 783-7676
(CITY, STATE AND ZIP CODE) COUNTRY San Antonio, TX 78216-6999 USA	EMERGENCY TELEPHONE NUMBER Chemtrec (800) 424-9300
DISTRIBUTOR'S NAME Same	
ADDRESS (NUMBER, STREET, P.O. BOX)	TELEPHONE NUMBER FOR INFORMATION
(CITY, STATE AND ZIP CODE) COUNTRY USA	EMERGENCY TELEPHONE NUMBER

SECTION 2 - HAZARDOUS INGREDIENTS

HAZARDOUS COMPONENTS	CAS #	% (Sect. 16) (by volume)	OSHA PEL PPM	OSHA PEL MG/M³	ACGIH TWA PPM	ACGIH TWA MG/M³	SARA TITLE III	RQ LBS
Gasoline	8006-61-9	100	300	900	300			
Contains or may contain:								
Toluene (a,b,c,e,f,g)	108-88-3	0 - 35	200		50		Yes	1000
Xylene (mixed) (a,b,c)	1330-20-7	0 - 25	100	435	100		Yes	1000
Pentane	109-66-0	0 - 20	1000	2950	600			
Trimethylbenzenes, mixed isomers (a)	25551-13-7	0 - 4			25		Yes	
Benzene (a,b,c,d,e,f)	71-43-2	0 - 5	1		0.5		Yes	10
Butane	106-97-8	0 - 12	800	1900		800		
Ethylbenzene (a,c)	100-41-4	0 - 5	100	435	125	545	Yes	1000
Heptane	142-82-5	0 - 2	500	2000	400			
Cyclohexane (a,b,c)	110-82-7	0 - 5	300	1050	300		Yes	1000
n-Hexane	110-54-3	0 - 8	500	1800	50	176		
n-Octane	111-65-9	0 - 1	500	2350	300	1400		
Ethanol	64-17-5	0 - 20	1000	1900	1000			
Naphthalene (a,b,c,g)	91-20-3	0 - 1.1	10	50	10		Yes	100
Trimethylbenzene 1,2,4 (a)	95-63-6	0 - 7	25	125			Yes	
Isopentane	78-78-4	0 - 20	not established					
Styrene (a,c,d,e,g)	100-42-5	0 - 4	100		20		Yes	1000
Methyl tert - butyl ether (a)	1634-04-4	0 - 18			40	144	Yes	
Ethyl tert - butyl ether	637-92-3	0 - 21	not established					
Tertiary - Amyl methyl ether	994-05-8	0 - 20	not established					
Alkanes, Cycloalkanes, Alkenes, Aromatic hydrocarbons		balance						

(a,c) See Section 15

(b) Indicates that the Resource Conservation and Recovery Act (RCRA) has determined the waste for this chemical is listed as hazardous and must be handled according to regulations in 40 CFR 260-281.

(d) Indicates substance appears on National Toxicology Program (NTP) list of carcinogens, International Agency for Research on Cancer (IARC) list of carcinogens or is regulated by the Occupational Safety and Health Administration (OSHA) as a possible carcinogen.

(e) Indicates listing in Table Z - , 29 CFR 1910.1000, one of 25 chemicals with substance - specific requirements; value shown is 8-hour Time Weighted Average. See table for acceptable ceiling concentration limits and acceptable maximum peak above the acceptable ceiling concentration.

(f) California Prop 65, Safe Drinking Water and Toxic Enforcement Act of 1986, chemicals known to the state to cause cancer or reproductive toxicity. A person in the course of doing business must warn others who may consume, come into contact with, or otherwise be exposed to this chemical.

(g) Product is listed or defined as a marine pollutant in IMDG Code or 49 CFR 172.101 Appendix B, List of Marine Pollutants and must be classified as an Environmentally Hazardous Substance, Class 9, in addition to any other defined hazards for this product.

SAMPLE

Figure E-1. Sample MSDS

MATERIAL SAFETY DATA SHEET

PRODUCT NAME: GASOLINE, UNLEADED
February 8, 2003

Page 2 of 6

SECTION 3 - HAZARDS IDENTIFICATION

EMERGENCY OVERVIEW

Bronze to amber colored liquid, extremely flammable, potentially hazardous vapors. Can cause eye and skin irritation upon contact. Inhalation of vapors can cause anesthetic effect leading to death in poorly ventilated areas. Danger Poison! Harmful if swallowed and/or aspirated into the lungs. Hazard symbols for this product - F, XI, XN Risk Phrases - R11 20 36 38.

POTENTIAL HEALTH EFFECTS

INHALATION: High concentrations are irritating to the respiratory tract; may cause headache, dizziness, nausea, vomiting and malaise. Xylene causes central nervous system effects, anemia, liver and kidney effects, and eye damage after repeated or prolonged exposure to high concentrations.

SKIN: Brief contact may cause slight irritation; prolonged contact may cause moderate irritation or dermatitis. Xylene causes central nervous system effects, anemia, liver and kidney effects, and eye damage after repeated or prolonged exposure to high concentrations.

EYES: High vapor concentration or contact may cause irritation and discomfort.

INGESTION: May result in vomiting; aspiration of vomitus into the lungs must be avoided; DO NOT induce vomiting. Minute amounts aspirated into the lungs can produce severe lung injury, chemical pneumonitis, pulmonary edema or death.

CARCINOGENICITY NTP? Yes IARC MONOGRAPHS? Yes OSHA REGULATED? Yes

Gasoline has been classified as a Group 2B carcinogen (possibly carcinogenic to humans) by the International Agency for Research on Cancer (IARC). Contains chemical(s) known to the State of California to cause cancer. Contains benzene, which has been classified as a carcinogen by the National Toxicology Program (NTP), and a Group 1 carcinogen (carcinogenic to humans) by the International Agency for Research on Cancer (IARC). Contains ethylbenzene which has been classified as a Group 2B carcinogen (possibly carcinogenic to humans) by the International Agency for Research on Cancer (IARC).

SAMPLE

SECTION 4 - FIRST AID MEASURES

INHALATION: Remove affected person to fresh air; provide oxygen if breathing is difficult; if affected person is not breathing, administer CPR and seek immediate emergency medical attention.

SKIN: Remove contaminated clothing; wash affected area with soap and water; launder contaminated clothing before reuse; if irritation persists, seek medical attention.

EYES: Remove contact lenses. Flush eyes with clear running water for 15 minutes while holding eyelids open; if irritation persists, seek medical attention.

INGESTION: DO NOT induce vomiting; if vomiting occurs spontaneously, keep head below hips to prevent aspiration of liquid into lungs; seek immediate medical attention. Vomiting may be induced only under the supervision of a physician.

SECTION 5 - FIRE FIGHTING MEASURES

FLASH POINT (METHOD USED)	FLAMMABLE LIMITS LEL: 1.3%	UEL: 7.6%
-45° F (-42.7° C) TCC	AUTOIGNITION TEMPERATURE: 495° F (257° C)	NFPA CLASS: IA

GENERAL HAZARDS: This product presents an extreme fire hazard. Liquid evaporates very quickly, even at low temperatures, and forms vapor (fumes) which can catch fire and burn with explosive violence. Invisible vapor spreads easily and can be set on fire by many sources such as pilot lights, welding equipment, and electrical motors and switches.

EXTINGUISHING MEDIA
Carbon dioxide, water fog, dry chemical, chemical foam

FIRE FIGHTING PROCEDURES
Firefighters must wear full facepiece self - contained breathing apparatus in positive pressure mode. Do not use solid stream of water since stream will scatter and spread fire. Fine water spray can be used to keep fire - exposed containers cool.

UNUSUAL FIRE AND EXPLOSION HAZARDS
Closed containers can explode due to buildup of pressure when exposed to extreme heat. Do not use direct stream of water on pool fires as product may reignite on water surface. Caution - Material is extremely flammable!

HAZARDOUS COMBUSTION PRODUCTS
Smoke, fumes, oxides of carbon

Figure E-1. Sample MSDS (continued)

MATERIAL SAFETY DATA SHEET

PRODUCT NAME: GASOLINE, UNLEADED
February 8, 2003

Page 3 of 6

SECTION 6 - ENVIRONMENTAL RELEASE MEASURES

STEPS TO BE TAKEN IN CASE MATERIAL IS RELEASED OR SPILLED: CAUTION - EXTREMELY FLAMMABLE - Evacuate and ventilate area; confine and absorb into absorbent; place material into approved containers for disposal; for spills in excess of allowable limits (RQ) notify the National Response Center (800) 424 - 8802; refer to CERCLA 40 CFR 302 and SARA Title III, Section 313 40 CFR 372 for detailed instructions concerning reporting requirements.

SECTION 7 - HANDLING AND STORAGE

PRECAUTIONS TO BE TAKEN IN HANDLING AND STORAGE: Keep container closed when not in use; protect containers from abuse; protect from extreme temperatures. CAUTION - EXTREMELY FLAMMABLE - keep away from all sources of ignition. "Empty" containers may contain residue which may form explosive vapors. Do not weld or cut near empty container that has not been professionally reconditioned. Use non-sparking tools when opening and closing containers. Maintain well ventilated work areas to minimize exposure when handling this material. Review all operations which have the potential of generating an accumulation of electrostatic charge and/or a flammable atmosphere (including tank and container filling, splash filling, tank cleaning, sampling, gauging, switch loading, filtering, mixing, agitation, and vacuum truck operations) and use appropriate mitigating procedures. Improper filling of portable gasoline containers creates danger of fire. Only dispense gasoline into approved and properly labeled gasoline containers. Always place portable containers on the ground. Be sure pump nozzle is in contact with the container while filling. Do not use a nozzle's lock-open device. Do not fill portable containers that are inside a vehicle or truck/trailer bed.

SECTION 8 - EXPOSURE CONTROLS / PERSONAL PROTECTION

ENGINEERING CONTR0LS

The use of local exhaust ventilation is recommended to control emissions near the source. Provide mechanical ventilation of confined spaces. Use explosion-proof ventilation equipment. See Section 2 for Component Exposure Guidelines.

PERSONAL PROTECTION:

RESPIRATORY PROTECTION (SPECIFY TYPE): None required while threshold limits (Section 2) are kept below maximum allowable concentrations; if TWA exceeds limits, NIOSH approved respirator must be worn. Refer to 29 CFR 1910.134 or European Standard EN 149 for complete regulations.

PROTECTIVE GLOVES: Neoprene or nitrile rubber gloves with cuffs.

EYE PROTECTION: Safety goggles with side shields

OTHER PROTECTIVE CLOTHING OR EQUIPMENT: Safety eyewash nearby

WORK / HYGIENIC PRACTICES: Practice safe workplace habits. Minimize body contact with this, as well as all chemicals in general.

SECTION 9 - PHYSICAL AND CHEMICAL PROPERTIES

VAPOR PRESSURE (MM Hg) 5 - 15 PSI @ 100° F	VAPOR DENSITY (AIR = 1) 3.0 - 4.0
SPECIFIC GRAVITY (WATER = 1) 0.700 - 0.800	EVAPORATION RATE (n-Butyl Acetate = 1) < 1
SOLUBILITY IN WATER Negligible	FREEZING POINT Not determined
pH Not applicable	APPEARANCE AND ODOR Bronze to amber liquid, characteristic gasoline odor
BOILING POINT 80 - 430°F (26.6 - 221° C)	PHYSICAL STATE Liquid
VISCOSITY Not specified	VOLATILE ORGANIC COMPOUNDS (Total VOC's) 6.25 lbs / gallon

SECTION 10 - STABILITY AND REACTIVITY

STABILITY UNSTABLE: STABLE: XXX	CONDITIONS TO AVOID: Extreme temperatures, open flames, sparks

INCOMPATIBILITY (MATERIALS TO AVOID): May react with strong oxidizing agents, such as chlorates, nitrates, peroxides, etc.

HAZARDOUS DECOMPOSITION OR BYPRODUCTS: Decomposition will not occur if handled and stored properly. In case of a fire, oxides of carbon, hydrocarbons, fumes, and smoke may be produced.

HAZARDOUS POLYMERIZATION MAY OCCUR: WILL NOT OCCUR: XXX	CONDITIONS TO AVOID: None

SAMPLE

Figure E-1. Sample MSDS (continued)

MATERIAL SAFETY DATA SHEET

PRODUCT NAME: GASOLINE, UNLEADED
February 8, 2003

SECTION 11 - TOXICOLOGICAL INFORMATION

Hazardous Ingredients	%	CAS #	LD50 of Ingredient (Species and Route)	LC50 of Ingredient (Species)
Gasoline	100	8006-61-9	18.8 ml / kg Oral - rat	20.7 ml / l Inhalation - rat
Contains or may contain:				
Toluene (a,b,c,e,f,g)	0 - 35	108-88-3	5000 mg / kg Oral - rat	7525 ppm / 4H
Xylene (mixed) (a,b,c)	0 - 25	1330-20-7	4300 mg / kg Oral - rat	5000 ppm / 4H Inhalation - rat
Pentane	0 - 20	109-66-0	Not established	364 gm / m3 / 4H Inhalation-rat
Trimethylbenzenes, mixed isomers (a)	0 - 4	25551-13-7	Not established	Not established
Benzene (a,b,c,d,e,f)	0 - 5	71-43-2	930 mg / kg Oral - rat	10000 ppm / 7H Inhalation - rat
Butane	0 - 12	106-97-8	Not established	658 mg / L / 4H Inhalation - rat
Ethylbenzene (a,c)	0 - 5	100-41-4	3500 mg / kg Oral - rat	4000 ppm/4H(LCLo) Inhalation - rat
Heptane	0 - 2	142-82-5	Not established	75 gm / m3 / 2H Inhalation - mouse
Cyclohexane (a,b,c)	0 - 5	110-82-7	813 mg / kg Oral - mouse	Not established
n-Hexane	0 - 8	110-54-3	28710 mg / kg Oral - rat	48000 ppm / 4H Inhalation-rat
n-Octane	0 - 1	111-65-9	Not established	118 gm / m3 / 4H Inhalation - rat
Ethanol	0 - 20	64-17-5	3450 mg / kg Oral - mouse	20,000 ppm / 10H Inhalation - rat
Naphthalene (a,b,c,g)	0 - 1.1	91-20-3	1780 mg / kg Oral - rat	Not established
Trimethylbenzene 1,2,4 (a)	0 - 7	95-63-6	5 gm / kg Oral - rat	18 gm / m3 / 4H Inhalation - rat
Isopentane	0 - 20	78-78-4	1600 - 3200 mg / kg Oral - rat	Not established
Styrene (a,c,d,e,g)	0 - 4	100-42-5	5000 mg / kg Oral - rat	24000 mg/m3/2H Inhalation - rat
Methyl tert - butyl ether (a)	0 - 18	1634-04-4	4 gm / kg Oral - rat	23576 ppm / 4H Inhalation - rat
Ethyl tert - butyl ether	0 - 21	637-92-3	Not established	123 gm / m3 / 15M Inhalation - mouse
Tertiary - Amyl methyl ether	0 - 20	994-05-8	Not established	Not established

SAMPLE

SECTION 12 - ECOLOGICAL INFORMATION

No data are available on the adverse effects of this material on the environment. Neither COD nor BOD data are available. Based on the chemical composition of this product it is assumed that the mixture can be treated in an acclimatized biological waste treatment plant system in limited quantities. However, such treatment should be evaluated and approved for each specific biological system. None of the ingredients in this mixture are classified as a Marine Pollutant. In general, non-oxygenated gasoline exhibits some short-term toxicity to freshwater and marine organisms, especially under closed vessel or flow-through exposure conditions in the laboratory. The components which are the most prominent in the water soluble fraction and cause aquatic toxicity, are also highly volatile and can be readily biodegraded by microorganisms.

SECTION 13 - DISPOSAL CONSIDERATIONS

WASTE DISPOSAL METHOD: Dispose of in accordance with Local, State, and Federal Regulations. This product may produce concentrated hazardous vapors or fumes in a disposal container creating a dangerous environment. Refer to "40 CFR Protection of Environment Parts 260 - 299" for complete waste disposal regulations for ignitable materials. Consult your local, state, or Federal Environmental Protection Agency before disposing of any chemicals. Do not flush to sanitary sewer or waterway.

Figure E-1. Sample MSDS (continued)

MATERIAL SAFETY DATA SHEET

PRODUCT NAME: GASOLINE, UNLEADED
February 8, 2003

Page 5 of 6

SECTION 14 - TRANSPORT INFORMATION

PROPER SHIPPING NAME: Gasoline

HAZARD CLASS / Pack Group: 3 / II
REFERENCE: 49 CFR 173.150, .202, .242
IDENTIFICATION NUMBER: UN 1203
LABEL: FLAMMABLE LIQUID
HAZARD SYMBOLS: F

IATA HAZARD CLASS / Pack Group: 3 / II
IMDG HAZARD CLASS: 3.1 / II
RID/ADR Dangerous Goods Code: 3
Canadian TDG Class / Division: 3.2

Note: Transportation information provided is for reference only. Client is urged to consult CFR 49 parts 100 - 177, IMDG, IATA, EC, Canadian TDG, and United Nations TDG information manuals for detailed regulations and exceptions covering specific container sizes, packaging materials and methods of shipping.

SECTION 15 - REGULATORY INFORMATION

TSCA (Toxic Substance Control Act)
Motor gasoline is considered a mixture by EPA under the Toxic Substances Control Act (TSCA). The refinery streams used to blend motor gasoline are all on the TSCA Chemical Substances Inventory. This product may contain methyl tertiary-butyl ether (CAS #1634-04-4) or tert-amyl methyl ether (CAS #994-05-8), both of which are currently undergoing review and testing under TSCA Section 4. Notification to the U.S. EPA Office of Toxic Substances is required prior to export of this material from the United States.

SAMPLE

SARA TITLE III (Superfund Amendments and Reauthorization Act)
311/312 Hazard Categories
Immediate (Acute) Health Effects
Delayed (Chronic) Health Effects
Fire Hazard

313 Reportable Ingredients:
(a) Indicates a toxic chemical subject to annual reporting requirements of Section 313 of the Emergency Planning and Community Right-To-Know Act of 1986 and of 40 CFR 372.

CERCLA (Comprehensive Response Compensation and Liability Act)
(c) The Comprehensive Environmental Response, Compensation, and Liability Act (CERCLA) has notification requirements for releases or spills to the environment of the Reportable Quantity or greater amounts, according to 40 CFR 302.

CPR (Canadian Controlled Products Regulations)
This product has been classified in accordance with the hazard criteria of the Controlled Products Regulations and the MSDS contains all the information required by the Controlled Products Regulations

IDL (Canadian Ingredient Disclosure List)
Components of this product identified by CAS number and listed on the Canadian Ingredient Disclosure List are shown in Section 2.

DSL / NDSL (Canadian Domestic Substances List / Non-Domestic Substances List)
Components of this product identified by CAS number are listed on the DSL or NDSL and may or may not be listed in Section 2 of this document. Only ingredients classified as "hazardous" are listed in Section 2 unless otherwise indicated.

EINECS (European Inventory of Existing Commercial Chemical Substances)
Components of this product identified by CAS numbers are on the European Inventory of Existing Commercial Chemical Substances.

California Prop 65, Safe Drinking Water and Toxic Enforcement Act of 1986
Warning: This product contains a chemical known to the State of California to cause cancer.

EC Risk Phrases
R11 Highly flammable
R20 Harmful by inhalation
R36 Irritating to eyes
R38 Irritating to skin.

EC Safety Phrases
S16 Keep away from sources of ignition
S23 Do not breathe vapor
S25 Avoid contact with eyes
S28 After contact with skin, wash immediately with plenty of soap and water.
S29 Do not empty into drains

Figure E-1. Sample MSDS (continued)

MATERIAL SAFETY DATA SHEET

PRODUCT NAME: GASOLINE, UNLEADED
February 8, 2003

Page 6 of 6

SECTION 16 - OTHER INFORMATION

Values stated in "%" column in Section 2 and Section 11 do not reflect absolute minimums and maximums; these values are typical which may vary from time to time.

NFPA HAZARD RATINGS				
	HEALTH	1	0 = INSIGNIFICANT	3 = HIGH
	FLAMMABILITY	3	1 = SLIGHT	4 = EXTREME
	REACTIVITY	0	2 = MODERATE	
	PERSONAL PROTECTIVE EQUIPMENT	B	Safety Glasses, Gloves	

REVISION SUMMARY:
This MSDS has been revised in the following sections:

Section 2 - Changes in quantities
Changes in product numbers

SAMPLE

MSDS Prepared by: Chem-Tel, Inc.
1305 N. Florida Ave.
Tampa, Florida USA 33602
(800) 255-3924 Outside USA (813) 248-0573

DISCLAIMER: The information supplied in this data sheet is obtained from currently available sources, which are believed to be reliable. HOWEVER, THE INFORMATION IS PROVIDED WITHOUT ANY WARRANTY, EXPRESSED OR IMPLIED, REGARDING THE ACCURACY OF THE INFORMATION OR THE RESULTS TO BE OBTAINED FROM ITS USE.
Handling, storage, use or disposal of the above-referenced product is beyond our control and may occur under conditions with which we are unfamiliar. FOR THESE AND OTHER REASONS, WE DO NOT ASSUME RESPONSIBILITY AND EXPRESSLY DISCLAIM ANY LIABILITY FOR DAMAGE, INJURY AND COST ARISING FROM OR RELATED TO THE USE OF THE PRODUCT.

Product Number(s) :

05	20	74	133	269	354	1106
06	21	76	166	270	516	1286
08	25	77	167	281	517	1088
09	26	82	181	305	1037	1289
10	51	84	185	326	1038	1290
11	61	85	188	327	1039	1326
12	62	91	190	328	1040	
13	63	95	199	334	1041	
14	64	107	257	335	1042	
15	67	110	265	336	1043	
16	68	112	266	338	1044	
17	69	131	267	339	1045	
19	73	132	268	340	1098	

Legend:

ACGIH	American Conference of Industrial Hygienist
BOD	biochemical oxygen demand
CAS	Chemical Abstracts Service
CERCLA	Comprehensive Response Compensation and Liability Act
CFR	Code of Federal Regulations
COD	chemical oxygen demand
CPR	Canadian Controlled Products Regulation
DSL	Canadian Domestic Substances List
EINECS	European Inventory of Existing Commercial Chemical Substances
gm	gram
Inc	incorporated
IARC	International Agency for Research on Cancer
IDL	Canadian Ingredient Disclosure Act
IMDG	International maritime dangerous goods

Figure E-1. Sample MSDS (continued)

Legend (continued):

kg	kilograms
lb	pounds
ml	milliliters
mg	milligrams
MSDS	material safety data sheet
NDSL	Nondomestic Substances List
NFPA	National Fire Protection Association
NIOSH	National Institute for Occupational Safety and Health
NTP	National Toxicology Program
OSHA	Occupational Safety and Health Administration
PEL	Permissible Exposure Limit
P.O.	post office
PPM	parts per million
prop	proposition
RCRA	Resource Conservation and Recovery Act
RQ	reportable quantity
SARA	Superfund Amendments and Reauthorization Act
sect	section
TDG	transport of dangerous goods
TSCA	Toxic Substances Control Act
TX	Texas
TWA	time-weighted average
UEL	upper explosive limit
USA	United States of America

Figure E-1. Sample MSDS (continued)

REQUIREMENTS

E-5. Units must maintain an MSDS for every chemical being stored or used within the unit area. MSDSs are maintained at hazmat and HW storage areas, refueling points, maintenance areas, medical treatment facilities, and other places where hazmat is stored or used. MSDSs for all chemicals, solvents, and materials used in a work area are kept in a file or binder that is readily accessible to personnel who work there. Leaders brief their personnel on chemical hazards, PPE requirements, first aid, and spill response before allowing them to use hazmat. Commanders establish policies for periodically reviewing MSDSs to ensure that they are current and to ensure a quick response when identifying symptoms and handling emergencies.

E-6. Individuals should receive a copy of an MSDS when issued a hazmat through supply channels. If an MSDS is unavailable for a particular hazmat, it can be obtained through supply channels, the HMIRS (see chapter 5), or directly from the manufacturer or supplier. The MSDS is retained and used again during turn-in.

Table E-1. MSDS guide

Section/Topic	*Typical Contents*
Section 1–Substance Identity and Company Contact Identification	• Manufacturer's name and contact information for obtaining more information. • Trade or common name of product.
Section 2–Hazardous Ingredients	• National Institute for Occupational Safety and Health/Chemical Abstract System Number. • Chemical name and percentage. • Workers' exposure limits.
Section 3–Hazards Identification	• Emergency overview. • Potential health effects: ▪ Routes of exposure. ▪ Types and severity of effects. ▪ Signs and symptoms of exposure. ▪ Medical conditions that may be aggravated by exposure to the material.
Section 4–First Aid Measures	Routes of entry: ▪ Inhalation. ▪ Absorption (skin and eyes). ▪ Injection. ▪ Ingestion.
Section 5–Firefighting Measures	• Flash points, upper and lower flammable or explosive limits. • Flammability classification. • Flame propagation or burning rate of solid materials. • Properties that may initiate or intensify fire • Automatic ignition temperature. • Reactions that release flammable gases or vapors. • Known or anticipated hazardous products of combustion. • Extinguishing media. • Firefighting procedures. • Unusual fire and explosion hazards.
Section 6–Accidental Release Measures	Steps to be taken in case material is released or spilled.
Section 7–Handling and Storage	Precautions to be taken in handling and storage.
Section 8–Exposure Controls and Personal Protection	• Engineering controls (such as exhaust and ventilation systems). • Personal protection equipment needed.
Section 9–Physical and Chemical Properties	• Vapor pressure. • Vapor density. • Specific gravity. • Evaporation rate. • Solubility in water. • Freezing point. • Measure of the acidity or alkalinity of a solution (pH). • Appearance and odor. • Boiling point. • Physical state. • Viscosity. • Volatile organic compounds.

Table E-1. MSDS Guide (continued)

Section/Topic	*Typical Contents*
Section 10–Stability and Reactivity	• Stability. • Conditions to avoid. • Incompatibility (materials to avoid). • Hazardous decomposition or by-products. • Hazardous polymerization. • Conditions to avoid.
Section 11–Toxicological Information	• Hazardous ingredients. • Chemical Abstract System Number.
Section 12–Ecological Information	See figure E-1, page E-5.
Section 13–Disposal Considerations	See figure E-1, page E-5.
Section 14–Transport Information	• Proper shipping name. • Hazard class. • Reference. • Identification number. • Label. • Hazard symbols.
Section 15–Regulations	See figure E-1, page E-6.
Section 16–Other Information	See figure E-1, page E-7.

This page intentionally left blank.

Appendix F

Emerging Technologies

This appendix describes some of the latest technologies that can improve efficiencies and enable waste management while deployed. These and other similar commercially available devices can be acquired by units through contracting and should be considered when generating solutions to meet waste management challenges.

VOLUME REDUCTION

F-1. There is technology available to assist with reducing the overall volume of the waste that is being generated.

SCIENCE APPLICATIONS INTERNATIONAL CORPORATION SW SHREDDER

F-2. The Science Applications International Corporation SW shredder (see figure F-1) was developed by the U.S. Navy to reduce the volume of metal, glass, plastic, and other SW. The shredder is designed to unjam itself if difficult items or objects that cannot be shredded are encountered. It is structurally designed with blow-out panels (vented away from the operator) to withstand the unlikely event of an explosion. The shredder will process 50 pounds per hour of metal and glass or 80 pounds per hour of plastics. The unit weighs 1,800 pounds and requires 440-volt alternating current, three-phase, 25 ampere, 60-hertz power.

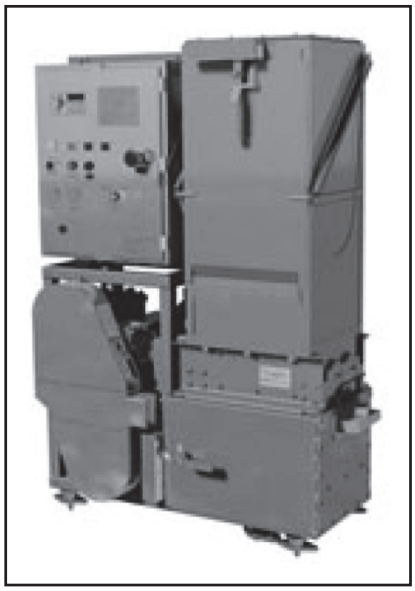

Figure F-1. Science Applications International Corporation SW shredder

SCIENCE APPLICATIONS INTERNATIONAL CORPORATION PLASTICS WASTE PROCESSOR

F-3. This device reduces the volume of plastic wastes by compressing it into a dense, 20-inch-diameter, sanitary disk that is suitable for long-term storage. This unit (see figure F-2) is intended to be used in conjunction with the Science Applications International Corporation SW shredder shown in figure F-1, page F-1.

Figure F-2. Science Applications International Corporation plastics waste processor

FOX COMPACTORS, INCORPORATED, MODEL 24-30 COMPACTOR/BALER

F-4. This compactor (see figure F-3) is designed to reduce the volume of SW by 80 percent. It applies a force of 12,000 pounds and creates a waste cube of 100 to 125 pounds that measures 16 inches tall by 21 inches deep by 26 inches wide. It has a compaction cycle-time of 12 seconds. The unit weighs 875 pounds and measures 72 inches tall, 33 inches wide, and 27 inches deep. It has a 1 horsepower motor that operates on 115/208-230 volts.

Figure F-3. Model 24-30 compactor/baler

HARMONY ENTERPRISES, INCORPORATED, MODEL BCB2003 BEVERAGE CAN BALER

F-5. The BCB2003 (see figure F-4) combines baling and draining of both aluminum and plastic containers in one step. This device can destruct nearly 2,000 full plastic bottles or 4,000 full aluminum cans into one bale and has a 51-gallon reservoir to collect the liquids. This unit weighs 3,060 pounds and measures
131 inches tall, 54 inches wide, and 39 inches deep. It requires a 33-square-foot operating area and has a

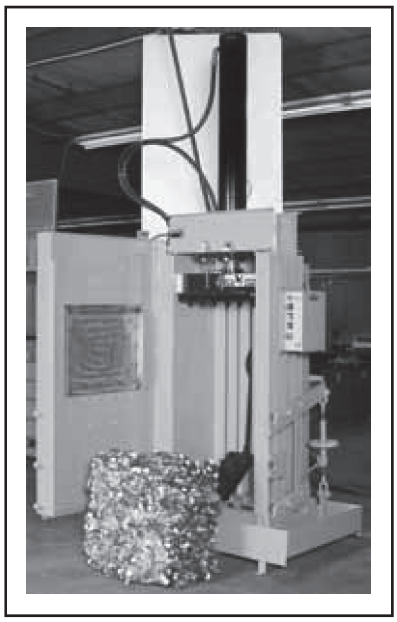

10-horsepower motor that operates on 208/230/460-volt, 3-phase, 60-hertz power.

Figure F-4. Model BCB2003 beverage can baler

MARATHON RJ-30 EXTRUDER

F-6. The RJ-30 High-Density Compactor Extruder (see figure F-5) features a specially designed curved tube that discharges a densely compacted log of refuse into any size and type of receiving container. Logs of refuse (18 to 24 inches) are gravity fed into the container. The unit weighs 3,300 pounds and measures 12 feet long and 6 feet wide. It can compact 32 cubic yards of waste per hour. It is operated by a 15 horsepower electric motor and hydraulic pump having a maximum pressure of 1,500 pounds per square inch.

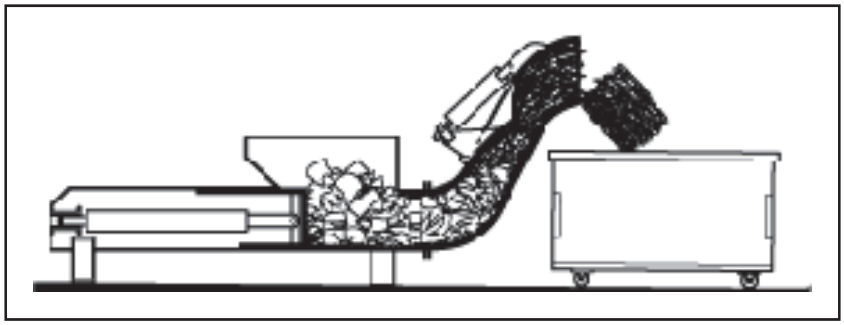

Figure F-5. Model RJ-30 high-density compactor extruder

AMERICAN BALER CLOSED-DOOR/NONSHEAR BALER

F-7. This closed-door baler (see figure F-6) reduces the volume of SW, specifically plastic containers, and is designed for longevity in low-production applications. Its compact design allows it to be placed in almost any area. This unit creates bales of plastic waste that measure 30 inches by 43 inches by 72 inches and weigh up to 1,600 pounds. It has a production capacity of one to two bales per hour.

Figure F-6. American Baler closed-door/nonshear baler

INCINERATION

F-8. There are many viable options available today for replacing burn pits with incinerators for the burning of SW. Selecting the technology that is appropriate for the mission is important.

AIR BURNERS, LLC®, FIRE BOX AND TRENCH BURNER

F-9. The Air Burners Fire Boxes (see figure F-7, page F-5) and Trench Burner (see figure F-8, page F-5) both use high-velocity air curtains to trap smoke particles for reburning and further reduction, which results in a cleaner and faster burn than open burning. The rotational air turbulence provides an oxygen-enriched environment within the combustion zone that accelerates the combustion process by raising the temperatures within the pit to approximately 1,832°F. The volume of material that can be processed per hour is based on the density of the waste material, its moisture content, the employed loading techniques, and the time period in which optimum temperatures in the pit can be retained. The T-300 Trench Burner has a throughput of 3 to 6 tons per hour, and the largest fire box can handle 6 to 10 tons per hour.

F-10. The Trench Burner T-300 is a self-contained, trailer-mounted system that includes a four-cylinder diesel engine power plant, mechanical drive system, blower fan, and 45-gallon fuel tank. The unit has a 30-foot-wide manifold that extends out to the trench to deliver the air curtain for burning. The trench is constructed using a backhoe or excavator and is dug 30 feet long (the length of the manifold), 10 feet wide, and 10 feet deep.

F-11. Fire Boxes are available in different sizes (small to large) that have increasing larger capacities. There is also an electric motor version (200-volt, 3-phase, 50-60 hertz) of the Fire Box that is suitable for stationary or more permanent applications.

F-12. With a trench burner, the burning is done in an earthen pit that is dug on-site. With a fire box, the burning is done aboveground. Burning operations are typically more efficient (faster and cleaner) in a Fire Box compared to the Trench Burner since the burn chamber does not rely on the accuracy of an earthen trench. The Trench Burner is more mobile, and the ash from burning is usually left in the trench and buried. However, digging the trench may be challenged by rocks or roots and the trench walls must be vertical for pollution control benefits to be effective. The trench must also be dry (no water runoff or high water table). Burning operations can usually run for 3 days before the ash in the trench must be removed or buried. The trench can be reused as long as the earthen sides of the trench remain straight. However, it is usually best to move to a new trench because once the trench sides start to deteriorate, emissions will begin to increase and throughput will decrease.

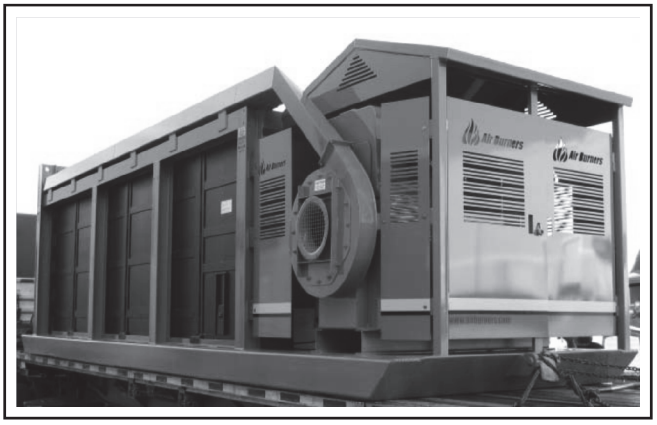

Figure F-7. Air Burners Fire Box

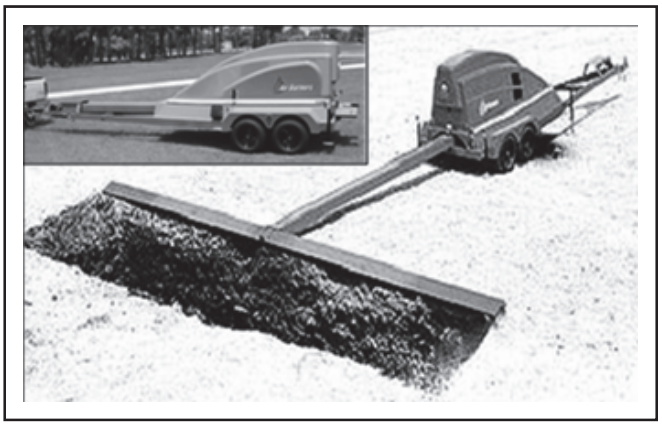

Figure F-8. Air Burners Trench Burner T-300

ELASTEC, INCORPORATED/AMERICAN MARINE, INCORPORATED, SMARTASH INCINERATOR

F-13. This incinerator (see figure F-9, page F-6) reduces the volume of combustible SW. It is a small-scale SW incinerator that is portable and meets the Environmental Protection Agency requirements for burning nonhazardous SW. The Smartash uses the waste as fuel. Users simply load a 55-gallon, open-head, steel drum; light the load, and clamp on the lid. Two electric, high-velocity blowers create a cyclone of intense heat. It can burn approximately 50 pounds of waste per hour. Typical applications include mining camps, construction sites, and military outposts. The unit weighs 96 pounds (without the drum). The OilAway attachment can be used to inject waste oil into a burning Smartash for “wet” loads that are typically not burnable.

Figure F-9. Smartash portable, SW incinerator

ADVANCED COMBUSTION SYSTEMS, INCORPORATED, PC-400 INCINERATOR

F-14. The Advanced Combustion Systems PC-400 portable, containerized incinerator is engineered and manufactured to provide a rugged and durable, self-containerized incineration system for harsh environments (see figure F-10). This model has a burn rate of 500 pounds per hour, with a maximum charge of 108 cubic feet, and it weighs approximately 22,800 pounds.

Figure F-10. Advanced Combustion Systems PC-400 incinerator

ELASTEC INCORPORATED/AMERICAN MARINE, INCORPORATED, MEDIBURN INCINERATOR

F-15. The MediBurn medical waste incinerator (NSN 4540-01-551-9666) (see figure F-11, page F-7) is a portable, easy-to-operate, medical-waste incinerator. It operates on diesel fuel and requires 240-volt power. It accepts loads of 8 cubic feet and can handle up to 150 kilograms of waste per 8-hour day.

F-16. The MediBurn30 medical-waste incinerator (NSN 4540-01-581-2546) is modeled after the original MediBurn incinerator. The MediBurn30 uses modulating burners and under-air technology to provide up to 50 percent fuel savings over the original model while also providing a one-third larger capacity per batch load. The electronic controls have been updated for greater safety and control of the system with multiple languages available. The MediBurn30 incinerates up to 30 kilograms per hour.

Figure F-11. MediBurn medical-waste incinerator

QINETIQ PYTEC™ PRYOLYSIS WASTE DISPOSAL SYSTEM

F-17. This automatic, closed-loop system (see figure F-12) is being developed for the U.S. Army. It will super-heat all types of SW (including food, medical, paper, tin, oil, and glass) at a rate of 100 kilograms per hour. This self-sustaining system reclaims up to 500 kilowatts of the thermal energy from the waste per hour, a portion of which is used to sustain the process for electricity generation. It generates approximately 25 liters of inert "char" for every 100 kilograms of SW that it processes. The system is housed in two 20-foot standard shipping containers.

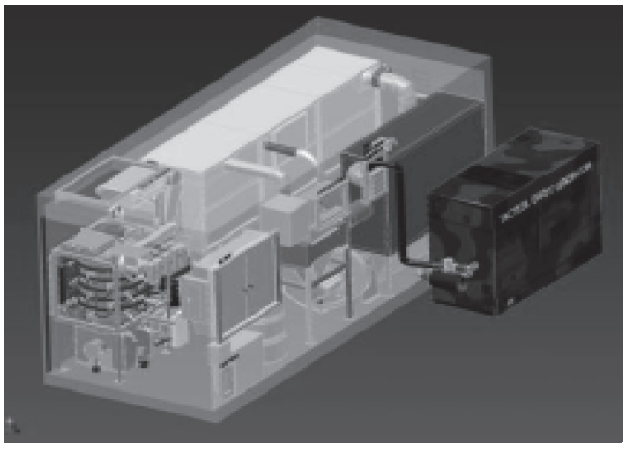

Figure F-12. PyTEC Pyrolysis waste disposal system

RECYCLING

F-18. Recycling is an excellent way to reduce the amount of SW generated and make good use of those materials. Recycling technology will be specific to the material that is to be recycled.

CLEAN-BURN, INCORPORATED, USED-OIL COIL TUBE BOILER

F-19. The Clean Burn CB-200-CTB (see figure F-13) is used to recycle used oil as a fuel source to generate hot water. It is capable of burning crankcase, transmission, and hydraulic oils and number 2, 4, and 5 fuel oils to produce hot water. It will burn approximately 1.4 gallons per hour and has a boiler volume of 5 gallons. The unit weighs approximately 677 pounds and is 58 inches long, 33 inches wide, and 29 inches tall. It requires a 115-volt alternating current, 60-hertz, single-phase power.

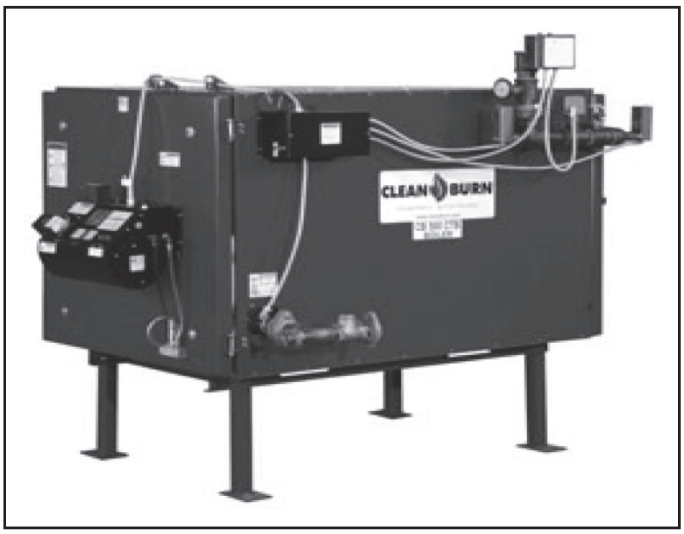

Figure F-13. Clean Burn CB-200-CTB

CLEAN-BURN, INCORPORATED, USED-OIL FURNACE

F-20. The Clean Burn CB-2500 (see figure F-14) is designed to recycle used oil to generate heat. It is capable of burning crankcase, transmission, and hydraulic oils and number 2, 4, and 5 fuel oils to produce heat. It burns approximately 1.7 gallons per hour and has an air flow output of 2,700 cubic feet per minute. The unit weighs approximately 509 pounds, is 103 inches long, 30 inches wide, and 32 inches high. It requires 115-voltage alternating current, 60-hertz, single-phase power.

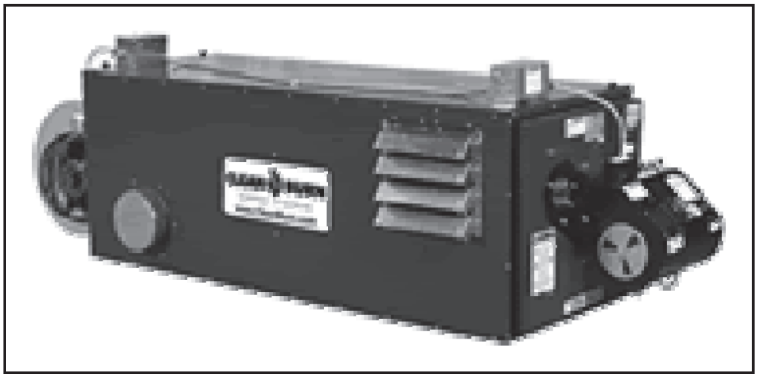

Figure F-14. Clean Burn CB-2500

CLARUS TECHNOLOGIES, LLC, OIL-CHANGE ALTERNATIVE TECHNOLOGY FUEL BLENDER

F-21. The Oil-CAT fuel blender (see figure F-15) converts used engine oil into fuel. It eliminates the requirements for handling, storing, and disposing of used oil and saves money on fuel costs (each gallon of used oil blended saves the cost of one gallon of JP-8). The used oil that is generated during a vehicle oil change is mixed with JP-8 from the vehicle's fuel tank and returned to the fuel tank of the vehicle. Used engine oil, blended with JP-8 in percentages up to 7.5 percent, meets the Environmental Protection Agency emission requirements without degrading engine performance. The Oil-CAT has an 11-gallon capacity and requires 120-volt alternating current or 24-volt direct current (optional for use with North Atlantic Treaty Organization plug) power.

Figure F-15. Clarus Technologies Oil-CAT

PYROLYSIS WASTE DISPOSAL SYSTEMS

F-22. The pyrolysis technology to convert tires to diesel and propane equivalent fuels and plastics into propane equivalent fuels is available, deployable, modular, and scalable. The processing equipment fits into a standard shipping container or can be scaled to accommodate a variety of large tires. The average military tire is about 40 percent diesel equivalent fuel. The significant drawback to using this technology is being able to provide propane burners that will heat air or water or make electricity. The diesel equivalent fuels produced from tires can be used directly in large diesel generators currently in theaters and many smaller generators found on bases. This waste management process has the capability of converting troublesome SW components into useful fuels, saving significant money and making base camps more self-sufficient.

F-23. The pyrolysis of tires produces four components: diesel equivalent fuel, propane equivalent fuel, char, and steel bead. The propane can be stored in low pressure tanks and can be used in the pyrolysis of the material in the container. The diesel is used in a variety of engines, reducing the amount of fuel transported to the base. The char can be compacted into fuel briquettes, composted, or used in other industrial processes. The steel bead is a high-carbon steel that is reused for many industrial processes.

WASTEWATER TREATMENT

F-24. Wastewater is a huge issue in waste management. There are many options in wastewater treatment technology available today. Selecting the option that is most feasible for the mission is important.

BIODISK CORPORATION PORTABLE WASTEWATER TREATMENT PLANT

F-25. This device (see figure F-16) provides packaged wastewater treatment in remote areas and is available in a variety of different sizes to meet specific requirements. Most of the components are preassembled to allow for quick setups. These plants are energy efficient, have a small footprint, and require low maintenance. The BIODISK Big John and Little John units fit into 40 foot and 20 foot, respectively, standard shipping containers and are air transportable.

Figure F-16. BIODISK Corporation portable wastewater treatment plant

ORENCO ADVANTEX® TREATMENT SYSTEM

F-26. The Orenco AdvanTex® Treatment System (see figure F-17) treats wastewater and makes it 98 percent cleaner. This system is a compact, premanufactured package that will produce clear, odorless effluent that can be discharged directly to the ground surface. The treatment volume depends on the unit size and model. Power requirements vary.

Figure F-17. Orenco AdvanTex Treatment System

POLLUTION CONTROL SYSTEMS, INCORPORATED, WASTEWATER TREATMENT PACKAGE PLANT

F-27. These preengineered, prefabricated structures (see figure F-18) are easily transportable, user-friendly, and low-maintenance. These systems have been used for small- and medium-size cities, mobile home parks, and remote areas (such as mining, logging, and construction sites).

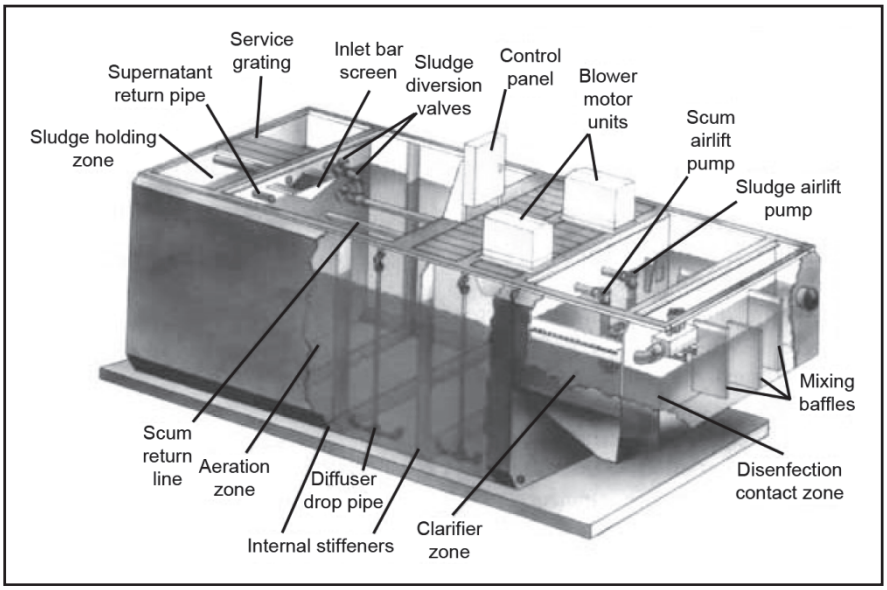

Figure F-18. Wastewater treatment package plant

SEAPOINT SYSTEMS, LLC, CONTAINER SYSTEM (C-SERIES) WASTEWATER TREATMENT UNIT

F-28. This unit (see figure F-19) is a preengineered, fully integrated, stand-alone wastewater treatment unit. It is housed within a standard shipping container and designed for small-volume applications in emergency management, temporary service, and remote settings. The C-Series features automatic treatment performance in a compact, easily transportable package with few interface requirements, low operating costs, and ease of maintenance. These units come in different models that are capable of treating between 5,000 and 30,000 gallons per day. The units are 40 feet long, 8 feet wide, and 9 feet 6 inches high. They weigh 27,000 pounds (empty, without water). The units require 3-phase inlet power.

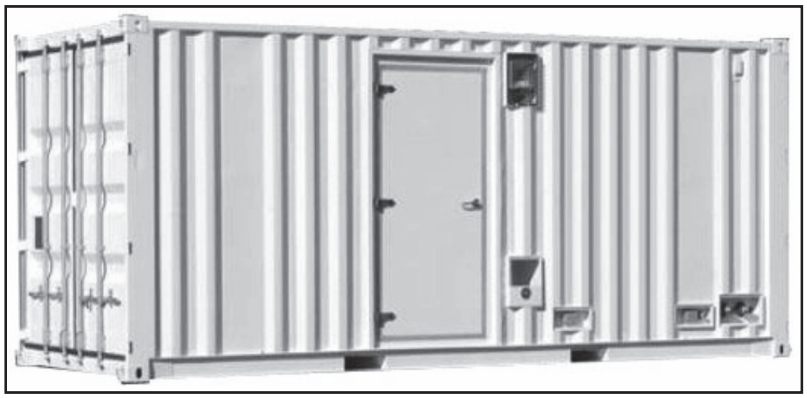

Figure F-19. Seapoint Systems container system C-series

This page intentionally left blank.

Glossary

SECTION I – ACRONYMS AND ABBREVIATIONS

AR	Army regulation
ATTP	Army tactics, techniques, and procedures
BCT	brigade combat team
CBRN	chemical, biological, radiological, and nuclear
CFR	Code of Federal Regulations
COA	course of action
CONUS	continental United States
COR	contracting officer's representative
DA	Department of the Army
DD	Department of Defense
DLA	Defense Logistics Agency
DOD	Department of Defense
DOEHRS	Defense Occupational and Environmental Health Readiness System
DRMS	Defense Reutilization and Marketing Service
EBS	environmental baseline survey
ECR	environmental conditions report
EP	engineer pamphlet
ESCS	environmental site closure survey
ETL	engineering technical letter
FFE	field force engineering
FM	field manual
FMI	field manual interim
G-4	assistant chief of staff, logistics
GTA	graphic training aid
HMIRS	Hazardous Materials Information Resource System
HN	host nation
HW	hazardous waste
HWAP	hazardous-waste accumulation point
HWSA	hazardous-waste storage area
JP	, joint publication
LOGCAP	Logistics Civil Augmentation Program
MCIP	Marine Corps interim publication
MCRP	Marine Corps reference publication
MAGTF	Marine air-ground task force
MD	Maryland
MCO	Marine Corps order
MDMP	military decisionmaking process
MEDCOM	U.S. Army Medical Command

METT-TC	mission, enemy, terrain and weather, troops and support available, time available, and civil considerations
METT-T	mission, enemy, terrain, troops, and time available
MIDI	military items disposal instructions
MSDS	material safety data sheet
NMCPHC	Navy and Marine Corps Public Health Center
NSN	national stock number
OEHS	Occupational and Environmental Health System
POL	petroleum, oils, and lubricants
PPE	personal protective equipment
PVNTMED	preventive medicine
ROWPU	reverse osmosis water purification unit
S-4	logistics staff officer
SOP	standing operating procedure
SW	solid waste
TB	technical bulletin
TB MED	technical bulletin, medical
TG	technical guide
TM	technical manual
UFC	Unified Facilities criteria
UROC	U.S. Army Corps of Engineers Reachback Operations Center
USACE	U.S. Army Corps of Engineers
USAPHC	U.S. Army Public Health Command

SECTION II – TERMS

***incinerator**

An enclosed device that uses controlled flame combustion for the process of burning waste.

***open burning**

The burning of any substance in such a manner that products of combustion are emitted directly into the surrounding outside air without passing through an adequate stack, duct, or chimney.

***purple pipe**

A fully enclosed, recycled nonpotable-water distribution system that operates separately from potable-water systems and other nonpotable-water systems (such as those used to carry water to showers and sinks).

***special waste**

Any waste material that does not meet the criteria for hazardous waste, but which still requires special handling or disposal procedures due to its physical, chemical, or biological properties that pose a threat to human health, equipment, property, or the environment.

***waste management**

The collection, transport, treatment, or disposal of waste materials in an effort to ensure a healthy and sanitary environment.

***integrated waste management**

The management of the entire waste process, including generation, storage, collection, transportation, resource recovery, treatment, and disposal. It employs several waste control methods based on the waste hierarchy (avoidance, reduction, recycling, reuse, recovery, treatment, and disposal) and is aimed at minimizing the environmental impact of waste.

This page intentionally left blank.

References

REQUIRED PUBLICATIONS

These are the sources quoted or paraphrased in this publication.

ARMY PUBLICATIONS

ADP 3-0. *Operations.* 10 October 2011.

ADP 5-0. *The Operations Process*. 17 May 2012.

ADP 6-0. *Mission Command*. 17 May 2012.

AR 200-1. *Environmental Protection and Enhancement.* 13 December 2007.

AR 700-48. *Management of Equipment Contaminated with Depleted Uranium or Radioactive Commodities*. 16 September 2002.

ATTP 3-34.80. *Geospatial Engineering.* 29 July 2010.

FM 3-34. *Engineer Operations*. 4 August 2011.

FM 5-19. *Composite Risk Management.* 21 August 2006.

FM 7-15. *The Army Universal Task List.* 27 February 2009.

PAM 40-11. *Preventive Medicine*. 22 July 2005.

TB 43-0134. *Battery Disposition and Disposal.* 19 May 2008.

TB MED 530. *Occupational and Environmental Health Food Sanitation*. 30 October 2002.

TB MED 593. *Guidelines for Field Waste Management.* 15 September 2006.

TM 3-34.70. *Plumbing, Pipe Fitting, and Sewerage*. 23 July 2012.

MEDCOM Regulation 40-35. *Management of Regulated Medical Waste*. 29 July 2008. < http://phc.amedd.army.mil/Pages/default.aspx>

TG 177. *A Commander's Guide to Regulated Medical Waste Management*. 2009. < http://phc.amedd.army.mil/Pages/default.aspx>.

MARINE CORPS PUBLICATIONS

MCO P5090.2A. *Environmental Compliance and Protection Manual.* 10 July 1998.

MCWP 4-11. *Tactical Logistics.* 13 June 2000.

MCWP 4-12. *Operational Logistics.* 30 January 2002.

MULTI-SERVICE PUBLICATIONS

FM 1-02/MCRP 5-12A. *Operational Terms and Graphics*. 21 September 2004.

FM 3-34.5/MCRP 4-11B. *Environmental Considerations.* 16 February 2010.

TM 38-410/DLAM 4145.11/NAVSUP PUB 573/AFR 69-9/MCO 4450-12. *Storage and Handling of Hazardous Materials.* 13 January 1999.

OTHER PUBLICATIONS

U.S. Central Command Regulation 415-1. *Construction and Base Camp Development in the USCENTCOM Area of Responsibility "The Sand Book."* 15 April 2009. <www.e-publishing.af.mil/ >

29 CFR 1910. *Occupational Safety and Health Administration General Industry Book.*

Armed Forces Pesticide Management Board TG 21. *Pesticide Disposal Guide for Pest Control Shops*. July 2002.

DLA Web site. <http://www.dlis.dla.mil/hmirs/default.asp>, accessed on 3 August 2011.

DOD Shelf-Life Program Intranet Web site. <https://headquarters.dla.mil/j-3/shelflife/>, accessed on 3 August 2011.

EP 1105-3-1. *Base Camp Development in the Theater of Operations*. 19 January 2009.

ETL 1110-3-466. *Selection and Design of Oil/Water Separators at Army Facilities.* 26 August 1994. <http://140.194.76.129/publications/>, accessed on 7 March 2011.

Federal Standard 376B, Preferred Metric Units for General Use by the Federal Government. <http://www.usaid.gov/policy/ads/300/fstd376b.pdf>, accessed on 3 August 2011.

Fort Leonard Wood Blackboard Portal. <https://www.blackboard.wood.army.mil/>, accessed on 29 July 2011.

MIDI database, USAPHC Web site. <http://usaphcapps.amedd.army.mil/MIDI/>, accessed on 3 August 2011.

NMCPHC Web site. <http://www.nmcphc.med.navy.mil/>, accessed on 3 August 2011.

OEHS data portal address. <https://doehsportal.apgea.army.mil/doehrs-oehs>, accessed on 3 August 2011.

OEHS e-mail. <oehs.data@us.army.mil>.

OEHS Web site. <https://doehrs-ih.csd.disa.mil/Doehrs/>, accessed on 3 August 2011.

UFC 3-240-10A. *Sanitary Landfill.* 16 January 2004.

UFC 4-451-10N. *Design: Hazardous Waste Storage.* 16 January 2004.

U.S. Army Engineer School, *Environmental Baseline Survey and Occupational and Environmental Health Site Assessment Handbook: Contingency Operations (Overseas)*. October 2009. <https://www.us.army.mil/suite/547917>, accessed on 11 March 2011.

U.S. Environmental Protection Agency Web site. <http://www.epa.gov/waste/conserve/rrr/composting/index.htm>, accessed on 3 August 2011.

UROC e-mail. <uroc@usace.army.mil>

UROC nonsecure Web site. <https://uroc.usace.army.mil>, accessed on 3 August 2011.

UROC secure e-mail. <uroc@usace.army.smil.mil>

UROC secure Web site. <http://uroc.usace.army.smil.mil>.

UROC VTC support Web site. <uroc-vtc@usace.army.mil>.

USAPHC Web site. < http://phc.amedd.army.mil/Pages/default.aspx>, accessed on 3 August 2011.

DOCUMENTS NEEDED

These documents must be available to the intended users of this publication.

DD Form 836. *Dangerous Goods Shipping Paper/Declaration and Emergency Response Information for Hazardous Materials Transported by Government Vehicles.*

DD Form 1348-1A. *Issue Release/Receipt Document.*

DA Form 2028. *Recommended Changes to Publications and Blank Forms*.

DA Form 4137. *Evidence/Property Custody Document.*

DRMS Form 1930. *Hazardous Waste Profile Sheet.* *<http://www.dispositionservices.dla.mil/newenv/documents/DRMS1930.pdf>*

READINGS RECOMMENDED

These sources contain relevant supplemental information.

ARMY PUBLICATIONS

AR 40-5. *Preventive Medicine.* 25 May 2007.

AR 700-141. *Hazardous Materials Information Resource System.* 13 August 2007.

Audiovisual Lending Library. <https://usaphcapps.amedd.army.mil/llsh/application.aspx>.

FM 3-34.400. *General Engineering*. 9 December 2008.

FM 4-25.12. *Unit Field Sanitation Team.* 25 January 2002.

FMI 2-01.301. *Specific Tactics, Techniques, and Procedures and Applications for Intelligence Preparation of the Battlefield.* 31 March 2009.

GTA 05-08-003. *Hazardous Material Spill Response Procedures.* 1 September 2009.

GTA 05-08-017. *The Environment and Deployment: Tactical Risk and Spill Reaction Procedures.* 1 August 2010.

TG 217. *Hazardous Material/Hazardous Waste Management Guidance for Maneuver Units During Field and Deployment Operations*. October 2000.

TM 5-814-5. *Sanitary Landfill.* 15 January 1994.

U.S. Army Center for Health Promotion and Preventive Medicine Fact Sheet. *A Commander's Guide to Medical Concerns Regarding Use of Burn Pits to Dispose of Solid Waste*. December 2009. < http://phc.amedd.army.mil/topics/envirohealth/em/Pages/ResourceMaterials.aspx>

JOINT PUBLICATIONS

DOD 4715.5-G. *Overseas Environmental Baseline Guidance Document.* 1 May 2007.

JP 3-34. *Joint Engineer Operations.* 12 February 2007.

MULTI-SERVICE PUBLICATIONS

TM 5-634/NAVFAC MO-213/AFR 91-8. *Solid Waste Management.* 1 May 1990.

TM 5-814-1/AFM 88-11. *Sanitary and Industrial Wastewater Collection: Gravity Sewers and Appurtenances.* 4 March 1985.

This page intentionally left blank.

Index

A

aerosol cans, 3-13, 5-1, 5-11, 5-12, 5-13, 6-6

asbestos, 3-13, **5-1**, 5-13

B

base camp
- base camp development planning, 1-14, 2-11, 4-18
- base camp mayor, 1-14
- transfer and closure considerations, 3-20, 4-32, 5-7, 5-19

batteries, 3-13, 5-11, 5-16, 6-6

black water, 4-15
- base camp transfer and closure considerations, 4-32
- drain field, 4-28, 4-29, 4-30
- septic tanks, 4-28
- sewage lagoons, 4-27
- treatment systems, 4-27, F-10, F-11

C

CBRN (chemical, biological, radiological, and nuclear) wastes, 5-13

chemical, biological, radiological, and nuclear (CBRN) wastes, 5-10, 5-13

composting, 3-4
- aerated membrane, 3-5
- in-vessel system, 3-6
- windrow method, 3-5

contaminated soil, 5-11

contracting officer's representative (COR), 1-9, 3-2, 6-5

D

drain field (see also black/gray water), 4-28

E

engineer staff officer, 1-10, 2-1, 2-4, 2-8, 5-4, 5-14, 5-17, 6-2

environmental baseline survey (EBS), 2-6, 3-7, 3-13, 3-20, 5-19

environmental conditions report (ECR), 3-20, 5-19

environmental considerations, 1-3, 1-10

environmental officer, 1-9, 1-11, 1-14, 3-20, 4-14, 5-4, 5-6, 5-7, 5-8, 5-10, 5-14, 5-15, 5-17, 5-19, 6-5

environmental site closure survey (ESCS), 3-20, 5-19, 5-20

F

field force engineering (FFE), 1-16

field sanitation team, 4-17, 5-13

flameless ration heaters, 5-12

flammability limits, E-1

flash point, E-1

G

gray water, 4-1
- base camp transfer and closure considerations, 4-32
- developing a plan for, 4-1
- drain field, 4-28, 4-29, 4-30
- evaporation beds, 4-13
- field methods, 4-7
- fixed facilities, 4-7
- grease traps, 4-11, 4-12
- oil-water separators, 4-14
- soakage areas, 4-14
- soakage pits, 4-9

H

hand-washing device, 4-18

hazardous characteristic code, E-2

hazardous substance, E-9

hazardous waste (HW), 5-1, C-2, C-6
- base camp transfer and closure considerations, 5-19, 5-20
- collection of, 5-2
- definition, 5-1
- disposal of, 5-10
- handling of, 5-8
- hazardous waste accumulation point (HWAP), 5-2, 5-3, 5-5, 5-6
- hazardous waste profile sheet, 5-17
- hazardous waste storage area (HWSA), 5-2, 5-3, 5-5, 5-6, 5-10, 5-14
- segregation of, 5-2, 5-5
- transportation of, 5-9

hazmat, 5-1, C-2, C-4, C-6
- container marking, 5-7
- container requirements, 5-7
- definition, 5-1
- disposal of, 5-10
- handling, 5-8
- recovery of, 5-10
- transportation, 5-9

I

incinerators, 3-11, 3-13
- barrel incinerator, 3-13
- emerging technology, F-5, F-6
- inclined-plane incinerator, 3-13, 3-15
- medical-waste incineration, 6-5

infection control, 6-3

L

landfill, 3-8, 3-9

latrines, 4-18
- bored-hole latrine, 4-21
- burn-out latrine, 4-24
- cat hole latrine, 4-19
- chemical latrine, 4-19
- closing procedures, 4-19
- deep-pail latrine, 4-26
- deep-pit latrine, 4-20
- maintenance, 4-18
- mound latrine, 4-25
- straddle trench latrine, 4-19

light bulbs, 5-11

logistics officer (S-4), 1-11

M

maintenance waste, 5-12

Marine Corps planning process, vi

material safety data sheet (MSDS), 5-6, 5-10, D-1, E-1

material safety data sheets (MSDS), 5-17, C-2
- overview, E-1
- requirements, E-9
- sample, E-3

medical waste, 6-1
- characterization, 6-4
- collection, 6-4
- definition, 6-1
- incineration of (see also incinerators), 6-5
- responsibility for, 6-1
- sterilization of, 6-6

storage of, 6-4
transporation of, 6-5
treatment and disposal, 6-5

military decisionmaking process (MDMP), vi, 2-2

N

nonhazardous solid waste, 3-1
collection of, 3-2
developing a plan for, 3-15
disposal of, 3-7
recovery of, 3-3
recycling of, 3-3
segregation, 3-1
transportation of, 3-3

O

occupational environmental health site assessment (OEHSA), 2-6

P

paints, 5-12

percolation test, 4-8

personal protective equipment (PPE), 5-8

pesticides, 5-11

preventive medicine (PVNTMED) personnel, 1-13, 6-3

purple-pipe recycled water distribution system, 4-6, 4-7, 4-8, 4-31

R

radioactive waste, 5-13

recovery, 1-2, 3-3, 5-10

recycle, 1-6, 1-7
emerging technology, F-8

reuse, 1-6, 1-7

reverse osmosis, 1-6, 4-5, 2

S

secondary containment, 5-5, C-2

septic system, 4-28

special waste, **5-1**
base camp transfer and closure considerations, 5-19
collection of, 5-2
definition, **5-1**
segregation, 5-2
segregation of, 5-5

spill
cleanup, C-6, C-7, C-8
kit, 5-6
kits, 5-10, 6-5
prevention, C-1
response, 5-6, 5-11, C-2, C-4, C-6
response equipment, C-6
response plan, C-2
response supplies, C-9

T

transfer stations, 3-9

U

U.S. Army Corps of Engineers (USACE), 1-16
base development planning cell, 1-17
environmental support team, 1-17
forward engineer support team-advance, 1-17
forward engineer support team-main, 1-17
USACE Reachback Operations Center (UROC), D-1

United States Army Corps of Engineers (USACE), 1-16

United States Army Public Health Command (USAPHC), 1-15, D-1

urine disposal facilities, 4-22
constructing and closing considerations, 4-18
maintenance of, 4-18
pipe urinal, 4-22
trough urinal, 4-22
urine soakage pit, 4-22
urinoil, 4-23

W

waste, 1-1
definition, 1-1

waste management, 1-3
appendix to plans and orders, B-1
assessing, 2-12
challenges to, 1-3
definition, **1-2**
executing, 2-11
fundamentals of, 1-6
integration of, 2-1
major activities of, 1-2
objective, 1-2
planning, 2-2, 2-3
preparing, 2-10
roles and responsibilities for, 1-9
steps for developing a plan, 2-3

TM 3-34.56
MCIP 4-11.01
19 July 2013

By order of the Secretary of the Army:

RAYMOND T. ODIERNO
General, United States Army
Chief of Staff

Official:

GERALD B. O'KEEFE
Acting Administrative Assistant to the
Secretary of the Army
1319816

ARMY DISTRIBUTION:

Active Army, Army National Guard, and United States Army Reserve: Not to be distributed; electronic media only.

Marine Corps: PCN 146 000015 00