American Metal Ware® Midline & Space Saver Urns

Operation and Instruction Manual

For

7000, 8000, 9000 and Chinese Tea Urn Series

TABLE OF CONTENTS

Installation....2-3
Operation and Start-up....4
How to Brew....5
Urn Adjustments....5-6
Care and Cleaning....7
Liquid Level Control System....8
Service
- Access Controls....9
- Drain Tank....10
- Remove Liner....10
- Replace Liner....10
- Replace Heater....11
- Replace Thermostat....11
- Convert Between Single/3 PH....11
- Replace Sprayover Pump....11

Troubleshooting....12-15
Parts Illustrations
- High Volume Urns....16
- 7700 Series Urns....17
- 7400 Series Urns....18
- 8000 Series Urns....19

Rough in Specifications
- High Speed Brew Urns (090-999)....20
- Sgl. 7700, 7400 or Chinese Tea Urn Series (A-1184)....21
- Twin 7700, 7400 or Chinese Tea Urn Series (A-890)....22
- Twin 1.5 Gallon Urn (090-749)....23
- 8000 Single Space Saver Urn (090-305)....24
- 8000 Twin Space Saver Urn (090.779)....25
- 8000 Triple Space Saver Urn (091-780)....26

Wiring Diagrams
- All series urns with Air Agitation (091-537)....27
- All series urns with low temp no brew (091-538)....28
- All series urns with no air agitation (091-541)....29
- Diagram for optional seven day timer (A-987)....30
- Diagram for optional high speed fill jug (A-1001)....31
- 208V 240V 2 or 3 heating element wiring, all urns (091-227) 32
- 380V-480V 3PH, 3 element wiring, all urns (091-027)....33
- 208V-240V alternate low watt heater wiring (091-024)....34

American Metal Ware Midline and Space Saver Models: 7000, 8000, 9000, and Chinese Tea Urn Series.

- Electric heated models have suffix (E).
- Steam heated models have suffix (S).
- Heat exchange urns start in 74, 80, 81, 84, 91 or 99, all without suffix (P).
- Pump models begin in 72, 73, 77, 82, 83, 87, 93, CH, or Models 81 and/or 91 with the second suffix (P).

Your model number is found on the name-plate of the urn below the controls.

Prior authorization must be obtained from Grindmaster Corporation for all warranty claims.

Grindmaster Corporation™
4003 Collins Lane
Louisville, Kentucky 40245 USA
(502) 425-4776
(800) 695-4500 (USA and Canada only)
(800) 568-5715 (technical service only)
FAX: (502) 425-4664
www.grindmaster.com

© Grindmaster Corporation™, 1996
PRINTED IN USA

1204 Form # AM-301-03
Part # 090-082

Installation

WARNING! ELECTRIC SHOCK HAZARD!

INSTALLATION OF THIS APPLIANCE SHOULD BE PERFORMED BY QUALIFIED SERVICE PERSONNEL ONLY. IMPROPER INSTALLATION COULD CAUSE ELECTRIC SHOCK.

See the rough-in drawings for this model for dimensions and locations of electric, steam, and water input.

Positioning

1) Position urn so that the faucets drip into a drip trough or drain receptacle of some type.

2) Level urn both front to back and left to right. The feet are adjustable for this purpose.

IMPORTANT:

THE PERSON INSTALLING THIS COFFEE URN IS RESPONSIBLE FOR ENSURING THAT THE ELECTRIC AND WATER CONNECTIONS MEET THE REQUIREMENTS OF THE NATIONAL ELECTRIC CODE, THE NATIONAL PLUMBING CODE, AND ANY LOCAL ORDINANCES.

DO NOT RUN TUBING, PIPES, CONDUIT OR CABLE UNDER CENTER PORTION OF SPACE SAVER URN. THIS AREA MUST BE KEPT CLEAR FOR SERVICING URN CONTROLS.

Water

1) Cold or hot water (160 degrees F. maximum) may be used. Heat input capacity is ample for the coldest water, and cold water should be used for best brewing results.

2) Provide shut-off valve and union in supply line near urn.

3) Minimum operating pressure at urn should be 30 PSI.

4) Maximum pressure recommended at urn is 70 PSI.

5) Copper tubing should be used for flexibility.

6) To insure pressure at the urn of at least 30 PSI, use 3/8" OD tubing for short runs, 1/2" OD tubing for longer runs, and larger size tubing for unusually long runs. Be sure other appliances will not reduce water pressure excessively.

7) Turn on the water supply line and check for leaks.

Heat Input

Electric Heated Urns, Models with suffix (E):

1) Check rating marking on urn nameplate to be sure electric lines match voltage, phase, and amperage requirements of urn. Select the proper cord and cord grip for electrical rating of the urn. The cord must be an oil resistant type such as SO, SOO, STO, STOO, SEO, SJO, SJOO, SJTO, SJTOO, SJEO, HSO, HSOO, HSJO, or HSJOO. Alternatively, flexible metal conduit and type THHN wires may be used.

2) The terminal block and ground screw are located behind a cover plate on the front, right side of the urn, or inside the control box mounted on right hand side of mid line equipment.

3) A neutral wire is normally required on all single phase and on 208 Volt, 3 phase power supplies to operate 120 VAC control circuit. In the case of single phase, 2 wire service (no neutral), or 3 phase 3 wire service (no neutral), a separate 120 VAC cord and plug (NEMA 5-15P) supplies 120 VAC power to the control circuit (or for use of transformer on heat exchange urns). This cord must be ordered separately.

   WARNING:
   NEVER USE THE GROUND CONDUCTOR AS A NEUTRAL. THIS COULD CAUSE ELECTROCUTION.

4) A fused disconnect switch should be installed near urn.

5) Urn body **MUST** be grounded. A grounding terminal is provided for this purpose.

7) Use only copper wire to connect this urn.

Steam Heated Urns, Models with suffix (S):

1) Steam supply line should have a shut-off valve ahead of the urn. (A strainer and control valve are located in the urn's control compartment.)

2) Steam return lines should be connected to a high-quality steam trap. Also, we recommend including a bypass and test valve to check trap operation while in service.

3) Use unions and/or copper tubing on both the supply and return connections to avoid strain on the urn.

4) A cord and plug (NEMA-5-15P), are attached for electrical control power. Plug cord into a nearby 115 volt, 15 amp, grounded wall outlet, only after the water line is turned on.

Operation and Start-Up

1) Open water supply line valve to urn.

2) Turn on or plug in the power supply to the urn. Water compartment will begin to fill automatically. Do not power up the urn when the water line is off.

3) Pump urns have a fast fill feature. Pump urns have model numbers beginning in 72, 73, 77, 82, 83, 87, 93, and CH with any suffix, or may be any model with second suffix (P). To fill the urn in only ten minutes on these models:

   a) Disconnect power to the urn.

   b) Remove the control drawer in the center, underneath the urn. On triple urns, remove the left drawer. On Midline and Chinese Tea Urns, remove the cover on the side of the control box. Leave the drawer sitting under the urn, making certain no uninsulated live parts are touching the urn body.

   c) Locate the FAST FILL VALVE which is a labeled screw type valve on the water inlet assembly - left side facing the urn.

   d) Open the valve completely.

   e) Leave the control drawer disconnected and restore power. The urn should fill in about ten minutes.

   f) Disconnect power.

   g) Close the valve until it is snug. There is no need to tighten.

   h) Reattach the control drawer to the urn. Restore power.

4) Turn the thermostat knob in front of housing to BREW position. Pilot light on top of thermostat bezel will illuminate. Water in urn will heat up, and thermometer pointer will rise to high end of BREW zone on thermometer dial. It will take approximately 45 minutes to heat water, depending on inlet water temperature, and urn heater wattage. Pilot light on top of thermostat bezel will go out when water in urn is at brew temperature.

5) Brew and discard at least one batch of water into each liner. Check that the level is correct. See the adjustments section if changes are needed.

How to Brew in an Automatic Urn

1) Place filter paper in brew basket with designated amount of coffee grounds. Coffee experts recommend from 6.4 to 8 ounces of coffee per gallon of water. Make certain you have a level bed of coffee. Consult your coffee supplier for exact brewing specifications. Filter paper sizes are:

Liner size	Filter size	American Part #
1.5 gallon	13 x 5	BB1.5WP
3 gallon	18 x 6	BB3WP
6 gallon	21 x 9	BB6WP
10 gallon	25 x 11	BB810WP

2) Replace cover. Lift and rotate the spray arm to position the nozzle in the hole on the basket cover.

3) Set the batch size toggle for a full or half batch. Press the start button on timer.

4) The brew cycle takes from 2 to 15 minutes depending on the size of the urn. When the brew is finished, allow one to two minutes for the coffee to drip from the basket.

5) When the drip period is complete, center the spray arm and remove the basket to throw away the grounds. Replace the liner cover to keep the coffee hot.

6) Coffee is ready to serve.

7) Hold brewed coffee at 185 to 190 degrees F by turning to the HOLD setting on thermostat knob.

Urn Adjustments

Brew Volume: Sprayover Time and Rate

Timer and sprayover rate are factory set. If other volumes of water or a faster or slower sprayover rate is desired, see following instructions:

Urn should be up to temperature before making adjustments of the brew system.

Timer Adjustment

The brew timer's full batch may be adjusted. The adjustment screw is located behind the plug under the start and stop buttons. See the figure at right. Since the sprayover rate is constant, the length of brew time sets the brew volume. The half batch is exactly 1/2 of the full batch.

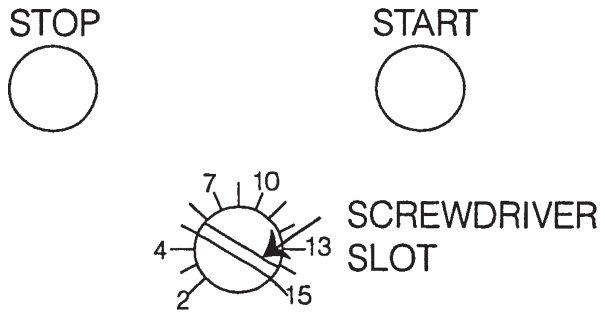

Urn Adjustments (con't.)

Sprayover Rate Adjustment

Pump Urns: models starting in 72, 73, 77, 82, 83, 87, 93, CH, or suffix (P).

A fixed orifice is located in top of spray arm swivel post. The only way to adjust the rate of flow from the spray arm is to drill a larger hole for more sprayover water or replace the existing orifice with a smaller hole size for less sprayover water.

Heat Exchange Urns: models beginning in 74, 80, 81, 84, 91, 99, without suffix (P).

Heat exchange urns have a regulator which adjusts the sprayover rate. The adjustment screw is located under urn in the back of the control drawer on the left side, or inside the control box on the Midline Urns. Loosen, CCW, the screw to decrease flow and tighten, CW, the screw to increase the flow. The spray pattern should touch the weld line near the top of the liner.

To set the sprayover rate, follow these steps:

1) Divide the desired brew size by the desired brew time. This is your sprayover rate in gallons per minute.

2) Operate the brew timer for one minute and measure the amount of water. If the volume is higher than your sprayover rate from step 1, decrease the flow. Increase the flow if the volume is too low.

3) Continue the adjustment until the desired rate is achieved.

Bypass Adjustment (Refer to Figure A)

The bypass adjustment controls the amount of water which bypasses the coffee during the brew. This water dilutes the final brew. If bypass is desired, open red handle on bypass valve. This opening will bypass up to about 40% of total sprayover water. Each complete turn is approximately equal to 5% bypass.

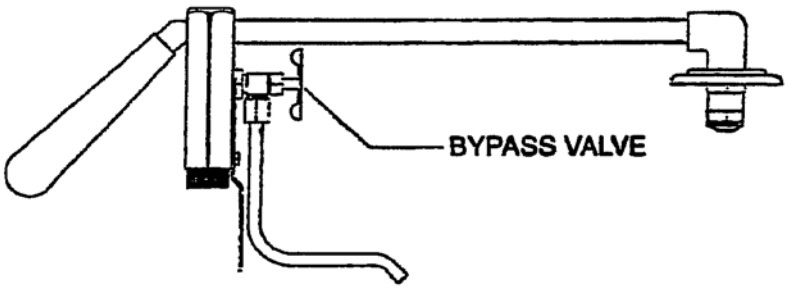

FIGURE A

Thermostat Adjustment

The thermostat is factory set so that the maximum temperature is about 204 degrees F in heat exchange urns and 195 degrees F in pump urns. This is the high end of brew range on the thermometer and corresponds to the BREW position on the thermostat. The HOLD position is the low end of the brew range on the thermometer, or 185 degrees F.

Water should never boil in the urn. If you need to adjust the maximum setting of the thermostat, do the following:

1) Remove the thermostat knob.

2) Insert small screwdriver into the center of the shaft. Turn the screw slightly clockwise to decrease the temperature.

3) Check the setting by adding cold water to make sure the temperature reaches the high end of the BREW range.

Care and Cleaning of Coffee Urns

WARNING: THE URN SURFACES AND WATER INSIDE ARE VERY HOT. USE CAUTION WHEN CLEANING THIS URN.

NEVER USE CHLORINE BASED CLEANERS SUCH AS BLEACH TO CLEAN STAINLESS STEEL. DO NOT USE SCOURING CLEANERS ON THE URN'S SURFACES.

After Each Brew

1) Discard grounds and rinse brew basket.

Every Day

1) Clean liners by rinsing and scrubbing with large, plastic bristle brush.

2) Wipe outside surfaces of the urn with a damp cloth.

3) Clean the brew basket. Remove wire basket insert if needed.

4) Wipe clean the liner covers.

5) Fill the liners with about one gallon of water to prevent coffee oil burn-in.

Weekly or Bi-Weekly Depending on Use

1) Fill the urn liners with about one gallon of hot water. Leave the thermostat on BREW.

2) Pour into the liner the recommended concentration of urn cleaner. Excessive amounts of cleaner will attack the stainless steel.

   Urn cleaners which have been used successfully:
   DIP-IT manufactured by Economics Laboratories, Inc.
   4 Corporate Park Drive, White Plains, NY 10604

   OXYLITE manufactured by Avril, Inc., Syndet Division
   601 N. Third Street, Reading, PA 19601

3) Scrub the liner interior with a large plastic bristle brush. Drain the liner.

4) Clean the gauge glasses with a long narrow brush. Rinse.

5) With the liners empty, remove the coffee faucets by unscrewing the large plastic wing-nuts which fasten the faucets. Scrub from the opening into the center of the urn with a long brush.

   WARNING: THE HOT WATER FAUCET SHOULD NOT BE REMOVED FOR CLEANING. HOT WATER WILL EMPTY FROM JACKET, CAUSING BURNS. TO CLEAN WATER GAUGE, CLOSE SHUT-OFF VALVE AT BASE OF GAUGE ASSEMBLY.

6) Unscrew the top of the faucet from its body. Scrub faucet body. Clean the silicone seat cup with a soft cloth and soapy water.

7) Reassemble faucets. Fill the liners with hot water and drain until the liner and all parts are completely rinsed.

Liquid Level Control System

Dual Level Control: What it Does (Refer to Figure B):

A) AUTO REFILL of the water compartment to keep the tank filled with water. When the water is used, the fill valve opens automatically to let in more water. The fill valve closes when the water level reaches full.

B) LOW WATER CUTOFF to prevent burnout of the electric immersion heater when there is not enough water to cover it. When low water occurs, the heat automatically switches off. The heat stays off until more water is added.

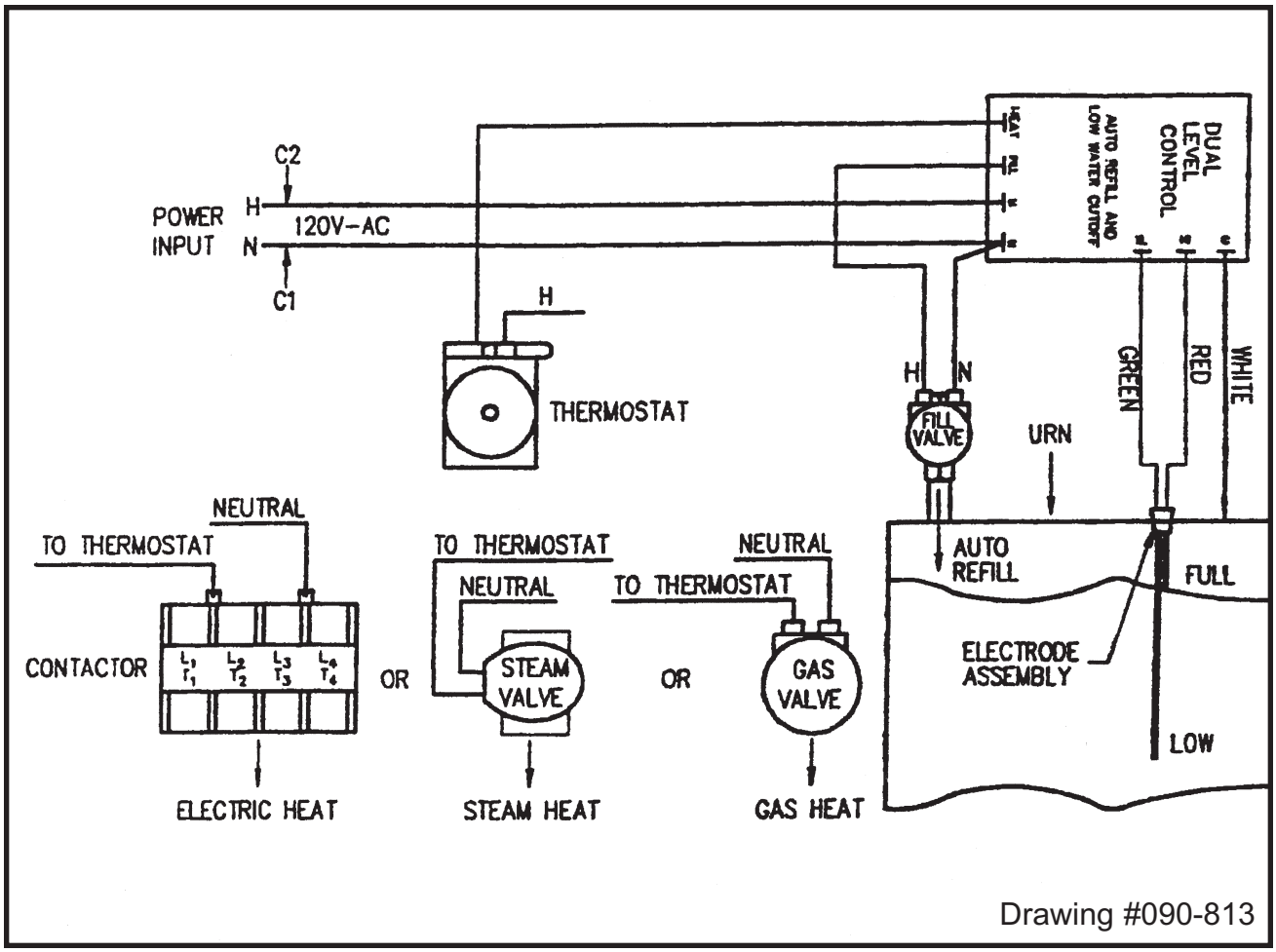

Figure B

Quick Service Check of Llquid Level Control System:

1) All wires secure and properly connected.
2) Clean the electrodes. Lime (mineral scale) build-up can interfere with operation of any liquid control system.

Service

WARNING! ELECTRIC SHOCK AND BURN HAZARD!

ALL TASKS DESCRIBED IN THIS SECTION ARE TO BE PERFORMED BY A TRAINED AND QUALIFIED SERVICE TECHNICIAN.

The rest of this manual contains information to aid the service technician who is maintaining this equipment. This section has information on performing common service tasks.

Controls, options, and heater wiring diagrams are provided. To find the correct diagram you must know if the urn has:

1) One thermostat (standard), or two (option 47: low temp/no brew).

2) Air agitation (standard on most models).

3) Which number of heaters and what electric ratings (see nameplate for electric ratings).

4) Fast jug fill hose or seven day timer.

Once you know the above, see the table of contents of this manual to find the drawing for the urn you are working with.

To Access Controls:

All controls are located on drawer(s) under the urn, or mounted in control box on the side of the urn (Midline Urns). To access these controls:

1) Shut off power to the urn.

2) Remove screws on front of the control drawer of Space Saver Urns, or on side panel for Midline Urns.

3) Drop panel by lowering front and pulling forward. If diagnosis must be made with power on and the drawer dropped, be sure no live parts contact the body of the urn.

WARNING! BURN HAZARD!

THIS URN IS FILLED WITH SCALDING HOT WATER. ALWAYS COMPLETELY DRAIN THE URN AND ALLOW TO COOL BEFORE ATTEMPTING TO MOVE AND/OR TRANSPORT THIS URN. FAILURE TO DRAIN AND COOL THE URN COULD RESULT IN SEVERE BURNS.

To drain the tank:

Note: Read all instructions before draining.

1) Disconnect electric power to the urn.

2) The urn body contains one water tank. It will contain one, two, or three coffee liners, depending on model, that may contain hot liquids.

3A) **On urns with boiler drain valve with hose connection:** Connect a drain hose with garden hose fitting to valve. Make sure other end of drain hose is placed in proper drain receptacle such as a sink. Open drain valve. Be careful, hot water will pour from urn.

3B) **On urns provided with petcock type drain valve:** Place a pan under the drain. Using pliers or hands with heavy rubber gloves open the valve. Be careful, hot water will pour from the urn. With heavy rubber gloves, push a 3/4" flexible rubber tube over the drain cock. The other end of the tube should be in a proper drain receptacle.

4) **To drain coffee liner(s):** Drain each liner by opening the faucet in front of the urn for each liner.

5) Close the drain valve after the urn is drained. Note: To perform the tasks listed below, the urn must be totally drained and cool.

NOTE: To perform the tasks listed below, the urn must be totally drained and cool.

To remove a liner:

1) Unscrew the liner nut at the bottom of the liner. A tool to do this may be purchased from Grindmaster Corporation.

2) Remove any screws on the outside perimeter of the liner ring on the top of the urn.

3) With a rubber mallet, tap the side of the liner near the bottom until the liner is loose. Find and remove the rubber washer which seals the bottom of the liner.

To replace a liner:

1) Place a liner washer over the inlet to the coffee tube. You must use a new washer whenever the liner is removed.
2) Place the liner in the urn, lining the hole in the bottom of the liner to the coffee tube.
3) With a rubber mallet, tap the top of the liner ring to seat the liner on the coffee tube.
4) Tighten the liner nut at the bottom of the liner.

Service (cont.)

To replace a heater (drain the urn first):

1) Remove the control drawer as described above. (Refer to page 9)
2) Locate the heater terminals under the urn, or on the side for Midline equipment.
3) Remove the heater liner which is closest to the terminals.
4) Loosen the heater connection and remove heater.
5) Place the copper sealing washer on the new heater with the split toward the element.
6) Position the new heater in the urn and tighten the nut.
7) Be sure the electrical connections are tight. Close the gap terminal with pliers if it is too loose. Replace the wires if they are damaged.

To replace the thermostat (drain the urn first):

1) Remove the control drawer as described above. (Refer to page 9)
2) Locate the fitting on the bottom surface of the urn which the thermostat capillary passes through.
3) Remove the coffee liner closest to this fitting.
4) Locate the thermostat bulb and remember its location. Some urns have two thermostats. Be sure to find the right one.
5) Unwrap the wire holding the bulb.
6) Unscrew the thermostat from the fitting on the bottom of the urn.
7) Disconnect the wires and remove the thermostat.
8) Attach the new thermostat and tighten the capillary tube fitting.
9) Use the wire to attach the bulb to the same location in the urn as the old thermostat.
10) Reattach the liner, as described above, close up the urn, allow the urn to heat to check the temperature setting.
11) On Midline or Chinese Tea Urns, the thermostat is mounted on the control box on the side of the urn.

To convert between single and three phase (on urns with three heaters only, 208-240V only):

Refer to the heater wiring diagram #091-227 at the end of the manual.
Use extra caution in ensuring that all wires are correctly and securely connected.

To replace a sprayover pump on pump urns:

1) Disconnect power from urn.
2) Remove the cover over the controls.
3) Locate the hose clamp in the control panel.
4) Clamp off intake hose to pump from water jacket.
5) Disconnect wires from pump to timer (label wires).
6) Disconnect ground wires.
7) Slip hoses off of pump.
8) Loosen screws which hold pump in place and remove pump.
9) Retain fitting and bracket for use with replacement.
10) Replace pump, connect wiring and tubing, and pump should be level.
11) Restore power to the urn.

Troubleshooting: Filling, Heating, and Brewing

Problems	Possible Cause	Service Check	Remedy
Filling Problems			
Over filling water tank even when the power is off.	• Fill valve not sealing properly.	• Water entering tank continuously, usually slow.	• Disassemble valve and clean out dirt. Valve may need new plunger if seal is worn.
	• Fill valve installed backwards.	• Look for direction of arrow on valve body.	• If arrow on valve is pointing toward water inlet, remove valve and install correctly.
Over filling water tank only when power is on.	• High electrode coated in lime or faulty.	• Jumper HI terminal on level control to metal enclosure stops fill.	• Remove electrode assembly and clean both probes. If this does not work, replace assembly.
	• Missing or faulty connection of C terminal on level control to metal enclosure.	• Jumper from C terminal to metal body stops fill.	• Make secure connection of C to metal body.
	• Fill valve connected to heat terminal on leve control.	• Check connections.	• Connect black lead for valve to FILL on level control.
	• Liquid Level Control is faulty.	• Jumper from HI to C or metal enclosure does not stop fill.	• Replace level control.
Tank does not refill.	• No power at equipment.	• Nothing operates.	• Check main switch or circuit breaker, urn's circuit breaker or power switch if provided.
	• No water at equipment.	• Crack water inlet fitting.	• Make sure all water supply line valves are open.
	• Water strainer clogged.	• Water pressure before strainer but not after.	• Remove and clean or replace strainer's mesh.
	• No power to level control.	• Check for 120V AC across H and N terminals on level control.	• If no voltage, check for loose or broken wires.
	• Level control faulty.	• Disconnect probe wire to HI terminal on level control. Check for 120V at FILL terminal.	• If no 120V at FILL terminal, replace level control.
	• Electrodes faulty.	• Tank fills only when probe wire is disconnected from HI terminal on level control.	• Replace electrodes. If no remedy, check for improper wiring or level probe tip touching metal.
	• Fill valve faulty.	• 120V is across FILL and N on level control, but no fill.	• Disassemble valve and clean or replace plunger if frozen. If plunger is OK, coil may need replacement.

Troubleshooting: Filling, Heating, and Brewing (con't.)

Problems	Possible Cause	Service Check	Remedy
Heating Problems			
Tank does not heat.	• Low electrode faulty or covered with lime.	• Jumper from XL terminal on level control to metal body allows heating.	• Clean electrode, check wiring. If no remedy, replace electrodes.
	• Level control faulty.	• Check for 120V between H and N terminals on level control. If OK, jumper between XL and metal body and check for 120V between HEAT and N terminals	• If 120V is not at HEAT, replace level control.
	• Thermostat faulty or out of cailbration.	• Make sure thermostat is turned on. Jumper across thermostat allows heating.	• Recalibrate thermostat. If no remedy or thermostat does not cycle, replace thermostat.
	• Heater contactor coil faulty. (electric heat)	• Check for 120V across contactor coil.	• If correct voltage, but contactor not closing, replace contactor.
	• Heater contactor contacts faulty.	• Check for heater voltage between each heater pole on contactor and a different terminal pole.	• If no continuilty across contactor when it is closed, replace contactor.
	• Heater faulty.	• Check resistance across elements with wires disconnected.	• If resistance is much different than 10 to 15 ohms, replace heater.
Recovery time is very long.	• Heater faulty.	• See above.	• See above.

Troubleshooting: Filling, Heating, and Brewing (con't.)

Problems	Possible Cause	Service Check	Remedy
Brewing Problems			
Brew volume too large or small.	• Timer out of adjustment.	• Compare timer setting to factory setting chart.	• Adjust timer.
	• Flow rate is incorrect.	• Brew batch for one minute and measure volume. Compare to factory setting chart.	• Adjust flow rate. If flow rate cannot be adjusted, check for lime in spray arm, or spray arm post. Water regulator on heat exchange urns may be faulty or need adjustment.
	• Presssure not adequate at urn.	• Water line must be 3/8" ID and pressure at least 30 PSI.	• Increase water line size. Plumb line so other equipment does not interfere with pressure.
	• Lime build-up in heat exchange coil. (heat exchange models only)	• Brew rate regulator opened completely, pressure OK at urn, but flow is still slow.	• De-lime heat exchange coil.
	• Timer faulty.	• Brew time does match timer setting. Timer not adjustable.	• Replace timer.
Brew volume erratic. (There are always some small variations from batch to batch).	• Pump cavitation (pump models only)	• Water temperature above 195 defrees F.	• Recalibrate thermostat to about 195 degrees F.
	• Timer faulty.	• Measure brew time for inconsistencies.	• If time is different from batch to batch, replace timer.
	• Pressure flucuations at urn.	• Check pressure at urn inlet.	• Plumb water line so its pressure is not influenced by other appliances.
			• On Heat Exchange Urns, adjust, repair, or replace regulators.

Troubleshooting: Filling, Heating, and Brewing (con't.)

Problems	Possible Cause	Service Check	Remedy
Brewing Problems (con't.)			
Brew will not start.	• Timer faulty.	• Check for 120V between H and N on timer. If OK, check for 120V between BREW and N on timer after pressing start.	• If no 120V BREW output from timer, replace timer.
	• Pump faulty (pump urns only)	• 120V between BREW and N on timer, but pump does not operate.	• Check for lime in pump impeller. Clean or replace impeller. If no remedy, replace pump.
	• Spray arm clogged with lime.	• Cannot blow through spray arm.	• Clean lime out of spray nozzle.
	• Coil on Heat Exchange Urns clogged.	• Brew valve opens but no water enters coil.	• Delime or replace coil.
Agitation does not automatically start after brew.	• Timer faulty.	• Pressing manual agitation button starts air pump.	• Replace timer.
	• Air pump faulty.	• Pressing manual agitation button does not start air pump. Also check for 120V between AGITATE terminals on timer.	• Replace air pump.
Agitation pump starts, but does not stir coffee.	• Silicone tube at top of gauge glass broken.	• Visual.	• Replace tubing.

If you still need help, call our Service Department at (800) 695-4500 (USA or Canada) (Monday through Friday, 8 am - 6 pm EST), +1-502-425-4776 or an authorized service center in your area. Please have the model and serial numbers ready so that accurate information may be given.

Prior authorization must be obtained from Grindmaster Corporation's Technical Services Department for all warranty claims.

Parts Illustration for High Volume Urns (Model 87710)

	DESCRIPTION		PART NO.
1.	Dual Air Pump		508004
2.	Electrode Assembly		712-017
3.	Timer		530-007
4.	Thermostat		504001
5.	Cover		800007
6.	Air Agitation Tubing		512011
7.	Vent Tube		A581B
8.	Spray Arm Assemby		1214028
9.	Cover Handle		513001
10.	Brew Basket		BB810
11.	Gauge Glass Assembly	Coffee	718-036
		Water	718-046
12.	Faucet		522094
13.	ADI Foot		510012
14.	Shank w/Wing Coupling Nut	Coffee	1211016
		Water	1211015
15.	Electric Immersion Water Heater		535-040
16.	Thermometer		506001
17.	Circuit Breaker		515072
18.	Manual Agitation Switch		515001
19.	Fill Solenoid Valve		537-060
20.	Sprayover Pump		533-012
21.	Water Pressure Regulator		505019
22.	Heater Contactor		514005
23.	Liquid Level Control - Dual		549-006
24.	Power Input Terminal Block		531-035
25.	Solid State Relay - Automatic Air Agitation		531-024
26.	Water Strainer		532064
27.	Start Push Button		515001
28.	Stop Push Button		515002
29.	Refill Water Inlet Standpipe		418-005
30.	Boiler Drain Valve		532097
31.	Pump Silicone		512012
32.	Ball Valve for Sprayover		537-064
33.	Plug for Ball Valve (Sprayover)		548-090

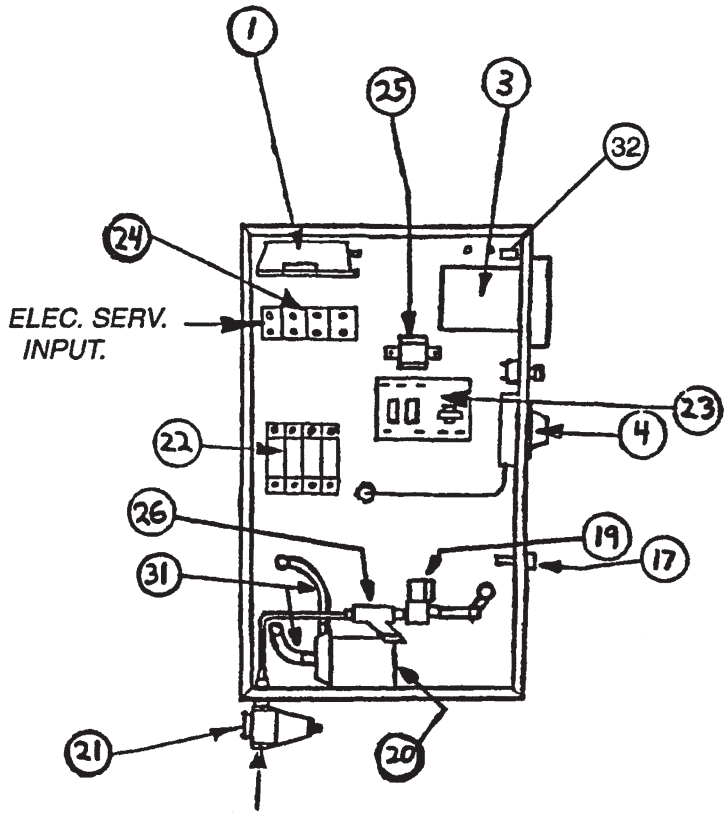

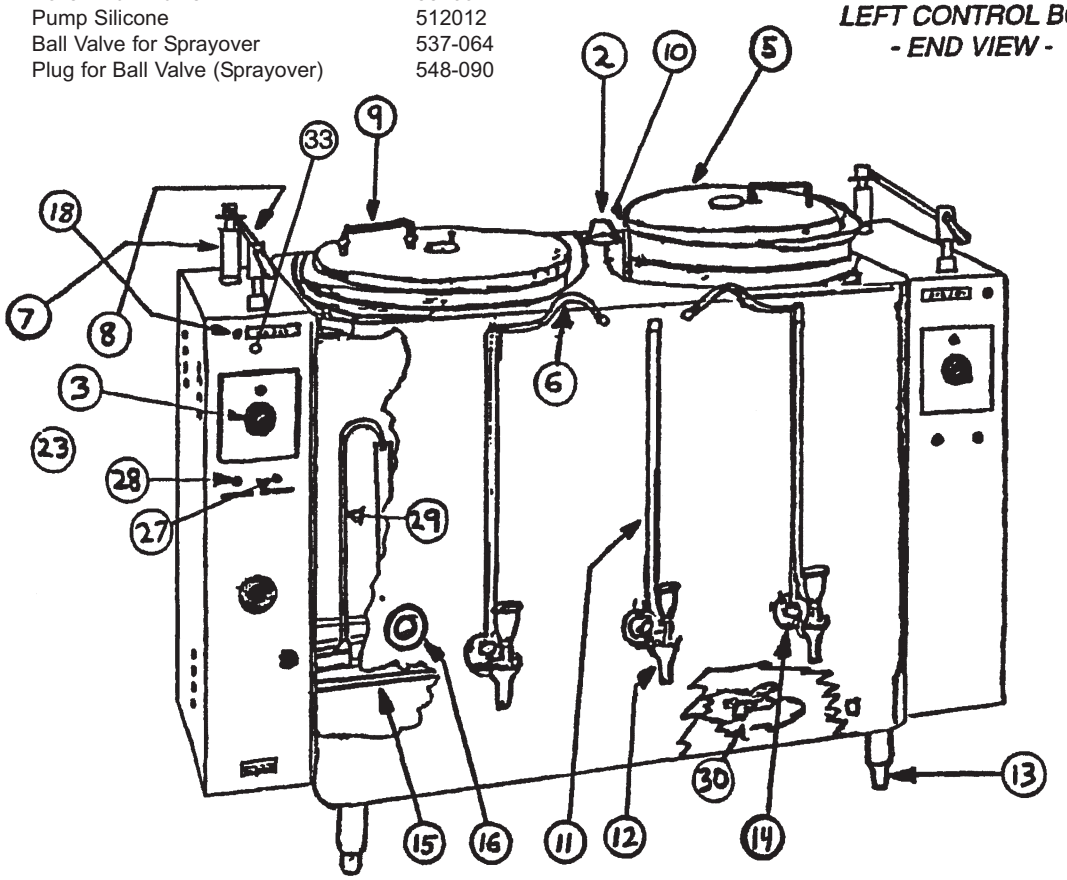

Parts Illustration for 7700 Urns

ITEM NO.	DESCRIPTION	URN SIZE	PART NO.
1	Cover Handle Kit	All	513001
2	Cover	Specify Model #	8000XX
3	Liner Nut	All	1200002
4	Liner Washer	All	520001
5	Coffee Liner	Specify Model #	10190XX
6	Spray Arm Ass'y	Sepcify Model #	12140XX
7	Air Agitation Tubing	All	512011
8	Plug in Cleanout Cap for Air Mix	All	A-689
9	Gauge Assy	Specify Model #	718-OXX
10	Coffee Delivery Tube	Specify Size and Single or Double Service Dualwall	12100XX
11	Upper Faucet Ass'y	All	537-048
12	Faucet	All	522094
13	Agitation Switch	All	515001
14	Thermometer	All	506001
15	Heater	Specify Model Ser.	535-OXX
16	Thermostat	All	504001
17	Bullet Foot	All	510012
18	Electrode Assy	Specify Model #	712-OXX
19	Brew Basket	Specify Model #	BBXX
20	Full/Half Batch Selector Switch	All	531-012
21	Start/Stop Switches (Part of Brew Timer)	All	530-007
22	Brew Pilot Light	All	515016
23	Dual Air Pump	All	508004
24	Terminal Block	All	505003
25	Timer	All	530-007
26	Dual Uquid Level Control	All	549-000
27	Heat Contactor	Specify Model #	5140XX
28	Water Strainer	All	532064
29	Control Box Door	Specify Model #	313-XXX
30	Sprayover Pump	All	533-012
31	Fill Solenoid Valve	All	537-060
32	Pump Silicone Tubing	All	512012
33	Circuit Breaker	All	515072

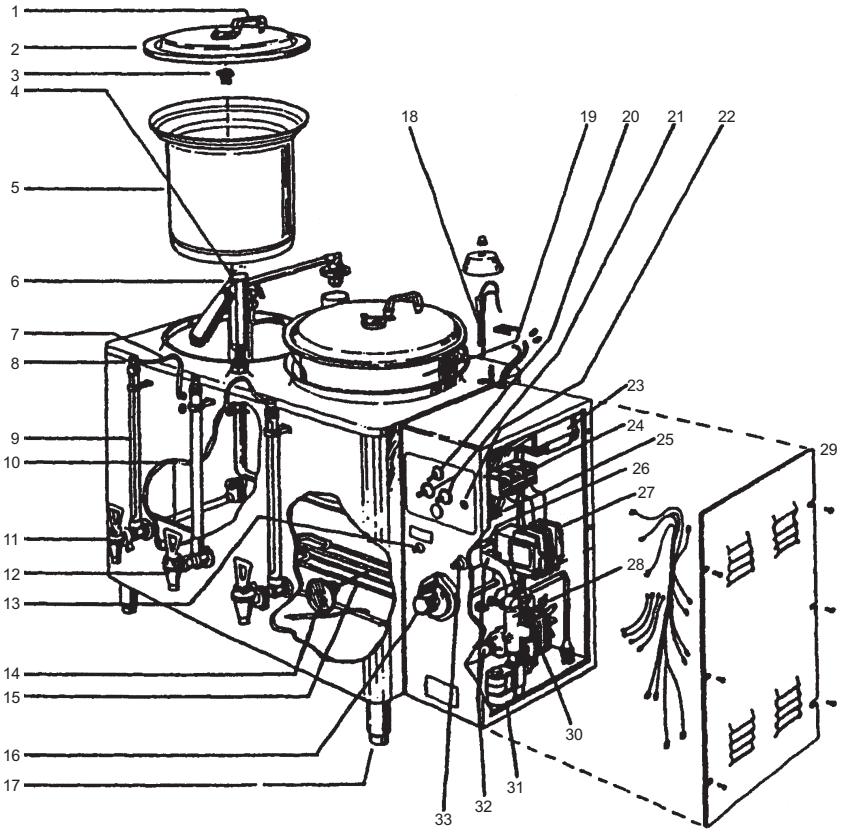

Parts Illustration for 7400 Urns

ITEM NO.	DESCRIPTION	URN SIZE	PART NO.
1	Cover Handle Kit	All	513001
2	Urn Cover Complete	Specify Model #	8000XX
3	Liner Nut	All	1200002
4	Liner Washer	All	520001
5	Coffee Liner	Specify Model #	10190XX
6	Spray Arm Ass'y	Specify Model #	12140XX
7	Silicone Tubing For Air Mix	All	512011
8	Plug in Gauge Cap For Air	All	A-689
9	Gauge Shield Ass'y	Specify Model #	718-OXX
10	Upper Faucet Ass'y	All	537-048
11	Faucet	All	522094
11A	Shank Ass'y for Faucet	Specify Coffee or Water	12110XX
12	Manual Agitation Switch	All	515001
13	Heater & Serial #	Specify Model #	535-0XX
14	Thermometer	All	506001
15	Heat Exchange Coil	Specify Model #	2030XX
16	Thermostat	All	504001
17	Bullet Foot	All	510012
18	Electrode Ass'y	Specify Model #	712-0XX
19	Brew Basket	Specify Model #	BBXX
20	Refill Water Inlet	All	718-XXX
21	Stop Switch	All	515002
22	Full/Half Batch Selector Switch	All	521-012
23	Start Switch	All	515001
24	Amber Brew Pilot Light	All	515016
25	Dual Air Pump	All	508004
26	Terminal Block	All	505003
27	Timer	All	530-007
28	Liquid Level Control	All	505002
29	Heat Contactor	Specify Model #	5140XX
30	Control Panel Door	Specify Model #	313-XXX
31	Outside 3/8" Water Regulator	All	505019
32	Brew Solenoid Valve	All	537-060
33	Inside 1/4" Water Regulator	All	505021
34	Water Strainer	All	532064
35	Fill Solenoid Valve	All	537-060
36	Circuit Breaker	All	515072
37	Coffee Delivery Tube	Specify Size & Single or Dbl. Service Dual Wall	12100XX

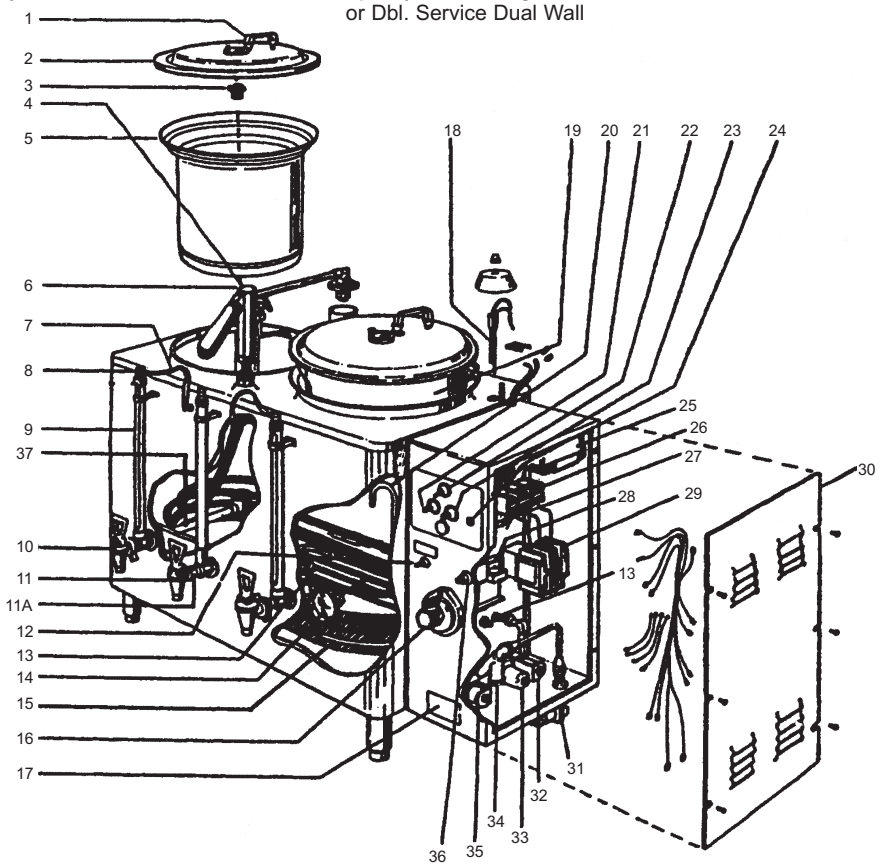

Parts Illustration for 8000 Urns

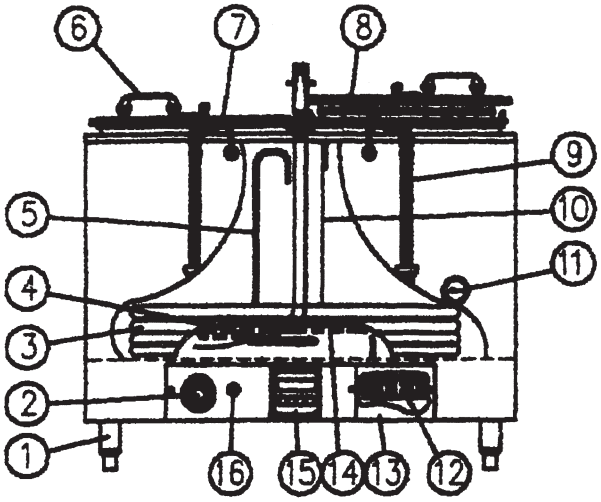

FRONT VIEW

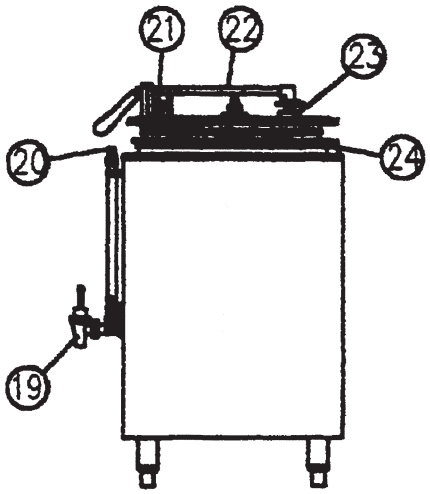

SIDE VIEW

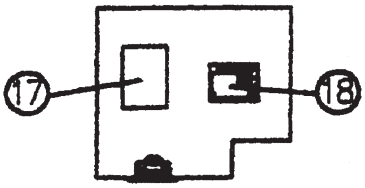

CONTROL PANEL TOP VIEW

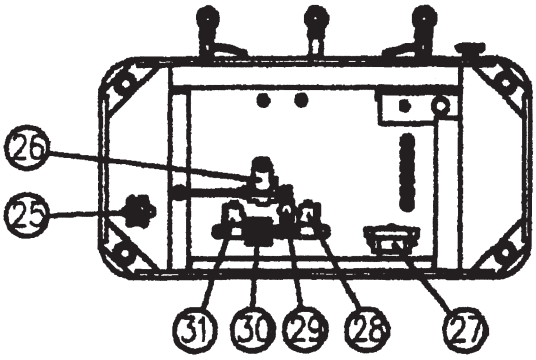

BOTTOM VIEW

	DESCRIPTION		PART NO.
1.	Adjustable Leg		510012
2.	Thermostat W/Pilot Light		504001
3.	Heat Exchange Coil		203XXX
4.	Thermostat Capillary Bulb	Part of	504001
5.	Refill Water Inlet Standpipe		418-XXX
6.	Cover Handle		513001
7.	Air Agitation Tubing		512011
8.	Coffee Liner Cover		800XXX
9.	Gauge Glass Assembly		718-XXX
10.	Electrode Assembly		712-XXX
11.	Thermometer		506001
12.	Terminal Block		531-035
13.	Terminal Block Cover		A1037
14.	Electric Immersion Heating Element (s) (Electric heat only)		535-XXX
15.	Solid State Timer		530-007
16.	Control Section Circuit Breaker		515072
17.	Dual Output Air Pump		508004
18.	Liquid Level Control		549-006
19.	Faucet		522094
20.	Top Gauge Cleanout Fitting for Air Agitation		A-689
21.	Bypass Valve		1214034
22.	Spray Arm Assembly		1214XXX
23.	Vent Tube		A581B
24.	Brew Basket		BBX
25.	Drain		532097
26.	Primary Water Inlet Regulator		505019
27.	Heater Contactor (Electric heat only)		514005
28.	Water Inlet Fill Solenoid Valve		537-060
29.	Inlet Water Strainer		532064
30.	Secondary Sprayover Water Regulator		505021
31.	Sprayover Solenoid Valve		537-060

Rough In Specifications for High Speed Brew Urns (Model 87710E)

UTILITY DATA

1. Must be connected to hot (140 degrees F) water supply, 3/8" NPT, 2.5 GPM flow rate min.

2. Steam Heat
   - A. Standard pressure =10-25 PSIG
   - B. Max. steam demand = 70 lbs. per hour
   - C. Boiler horse power = 2.3
   - D. Requires connection to 120V AC, 3 wire, 15 amp circuit; 6 foot cord with plug supplied

3. Electric Heat

A. Specify service

120/208V,1 PH, 3 Wire	*208V,1 PH, 2 Wire
120/208V, 3 PH, 4 Wire	*208V, 3 PH, 3 Wire
120/240V, 1 PH, 3 Wire	*240V,1 PH, 2 Wire
*240V, 3 PH, 3 Wire	*Requires separate connection to 120V AC 15 amp circuit; 6 foot cord with plug supplied.
*480V, 3 PH, 3 Wire	

B. Load - 15 KW for all services

Volts	208	240	480
1 PH, Amps	72	63	-
3 PH, Amps	42	36	18

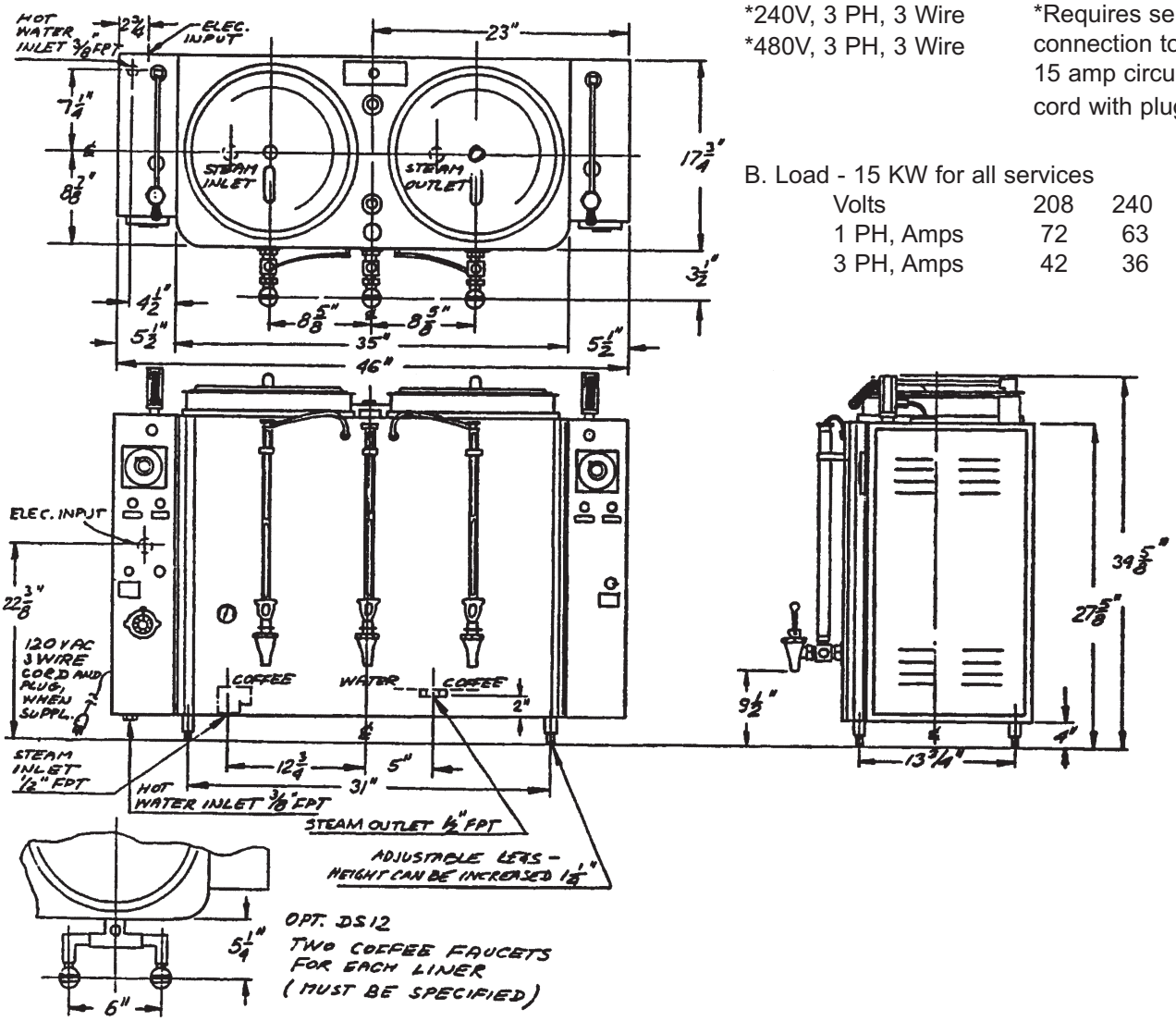

Drawing #090-999

Rough In Specifications for Single Auto Urns (7700, 7400, or Chinese Tea Urns)

MODEL	A	B	C	D	E	F	G	H	J	K	L	M	N	P	Q
8413 E,S	19	24 1/2	8	16	19 1/2	5 1/2	5 1/2	27 1/8	21 5/8	15	8 5/8	12	18	1 5/8	8 1/2
8416 E,S	22	27 1/2	8 7/8	17 3/4	21 1/4	7 5/8	5 1/2	33 1/8	27 5/8	18	9 1/2	13 3/4	22 3/8	1 5/8	8 1/2
84110 E,S	22	27 1/2	8 7/8	17 3/4	21 1/4	7 5/8	5 1/2	34 5/8	27 5/8	18	9 1/2	13 3/4	22 3/8	1 5/8	8 1/2
9413 E,S	18	23 1/2	7 1/2	15	18 1/2	5 1/2	5	27 1/8	21 5/8	15	8 5/8	12	18	1 1/4	8
9416 E,S	21	26 1/2	8 3/8	16 3/4	20 1/4	7 5/8	5	33 1/8	27 5/8	18	9 1/2	13 3/4	22 3/8	1 1/4	8
94110 E,S	21	26 1/2	8 3/8	16 3/4	20 1/4	7 5/8	5	34 5/8	27 5/8	18	9 1/2	13 3/4	22 3/8	1 1/4	8
7413 E,S	18	23 1/2	7 1/2	15	18 1/2	5 1/2	5	27 1/8	21 5/8	15	8 5/8	12	18	1 1/4	8
7416 E,S	21	26 1/2	8	16 3/4	20 1/4	7 5/8	5	33 1/8	27 5/8	18	9 1/2	13 3/4	22 3/8	1 1/4	8
74110 E,S	21	26 1/2	8 3/8	16 3/4	20 1/4	7 5/8	5	34 5/8	27 5/8	18	9 1/2	13 3/4	22 3/8	1 1/4	8
7700 E,S	*Same as 7400 Model Series*														

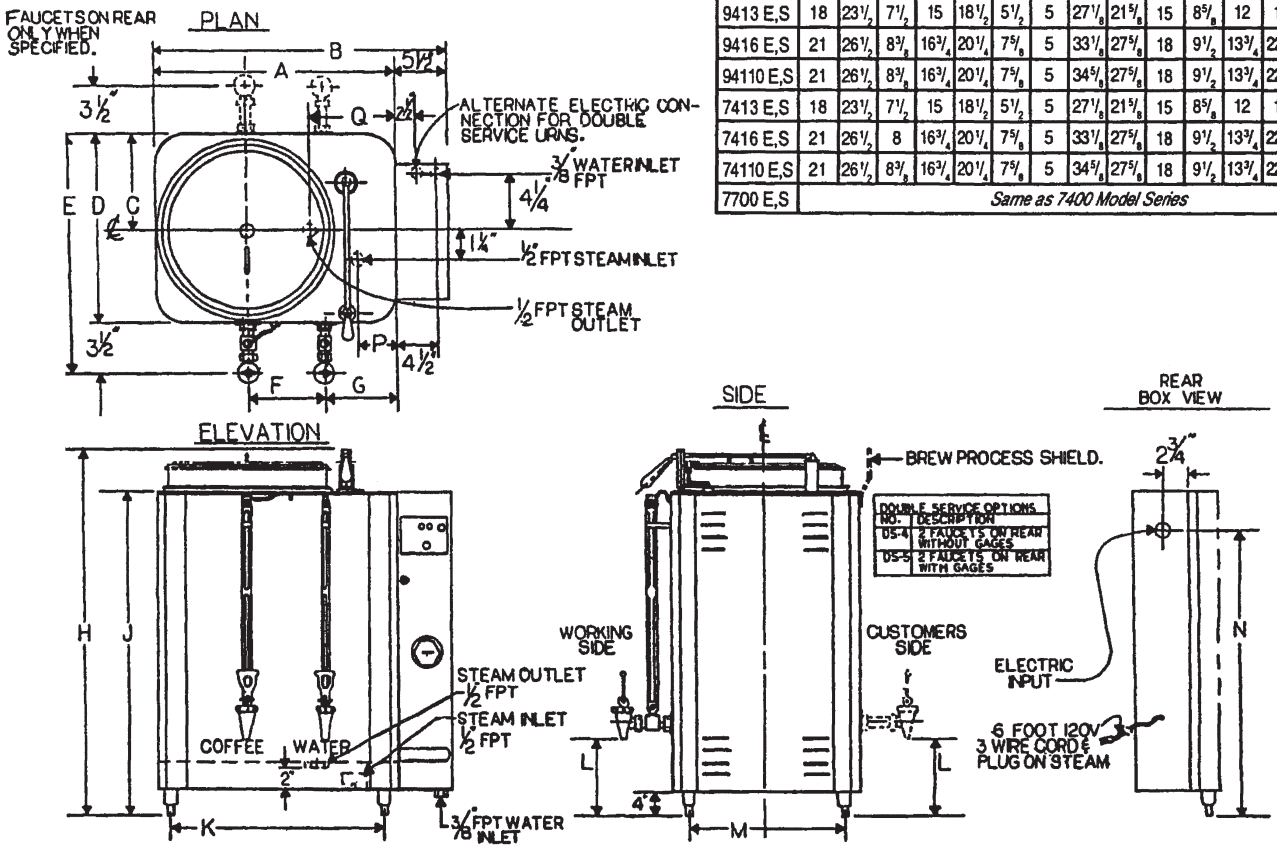

IF 120V SERVICE NOT AVAILABLE SPECIFY OPT. 22 CONTROL CIRCUIT TRANSFORMER

MODEL	Brew Liner Volume	Brew Basket Used	Paper Filter Size	Bag Ring Size	Liner Bag Size
8413ES 9413ES 7413E	3 GAL.	BB3	18 x 6	12 1/2	14 x 9
8416ES 9416ES 7416E	6 GAL.	BB6	21 x 9	14	17 x 9
84110ES 94110ES	10 GAL.	BB10	25 x 11	15	17 x 9

STEAM HEAT

Model No. Suffix (S)

- Specify steam pressure.
- Standard is 10 to 25 PSIG, other pressures extra cost.
- 6 ft. - 120V/3 wire cord and plug supplied for controls (1 amp).

Maximum steam demand, lbs. per hr.	8413 7413	6416.10 9416.10
	30	70

ELECTRIC HEAT

Model No. Suffix (E)

Specify service.

MODEL	8413 9413		8416 9416		84110 94110		7413		7416	
LOAD	KW	AMP	KW	AMP	KW	AMP	KW	AMP	KW	AMP
120/208V - 1PH - 3 WIRE	8	39	11.5	54	15	72	5.5	25	8.5	41
120/240V - 1PH - 3 WIRE	10.5	44	12	50	15	63	7	29	11.5	48
120/208V - 3PH - 4 WIRE	8	22	11.5	31	15	42	8	22	11.5	31
240V - 3PH - 3 WIRE	10.5	25	12	29	15	36	10.5	25	12	29
480V - 3PH - 3 WIRE	12	14	12	14	15	18	12	14	12	14

Drawing #A-1184

Rough In Specifications for Twin Auto Urns (7700, 7400, or Chinese Tea Urns)

MODEL	A	B	C	D	E	F	G	H	J	K	L	M
8443 E,S	31 1/2	37	16 1/4	11 5/8	11 5/8	7 3/4	27 1/8	18			8 5/8	21 5/8
8446 E,S	35	40 1/2	17 3/4	12 3/8	12 3/8	8 3/8	33 1/8	22 3/8			9 1/2	27 5/8
84410 E,S	35	40 1/2	17 3/4	12 3/8	12 3/8	8 5/8	34 5/8	22 5/8			9 1/2	27 5/8
9993 E,S	30 1/2	36	15 1/4	11 1/8	11 1/8	7 3/4	27 1/8	18			8 5/8	21 5/8
9996 E,S	34	39 1/2	16 3/4	11 7/8	11 7/8	8 5/8	33 1/8	22 3/8			9 1/2	27 5/8
99910 E,S	34	39 1/2	16 3/4	11 7/8	11 7/8	8 5/8	34 5/8	22 5/8			9 1/2	27 5/8
7443 E,S	30 1/2	36	15 1/4	11 1/8	11 1/8	7 3/4	27 1/8	18			8 5/8	21 5/8
7444 E,S	30 1/2	36	15 1/4	11 1/8	11 1/8	7 3/4	29 5/8	18			8 5/8	24 1/8
7446 E,S	34	39 1/2	16 3/4	11 7/8	11 7/8	8 5/8	33 1/8	22 3/8			9 1/2	27 5/8
74410 E,S	34	39 1/2	16 3/4	11 7/8	11 7/8	8 5/8	34 5/8	22 5/8			9 1/2	27 5/8
7443 G	30 1/2	36	15 1/4	11 1/8	13 3/8	7 3/4	29 7/8		18 1/2	14	11	24 1/8
7444 G	30 1/2	36	15 1/4	11 1/8	13 3/8	7 3/4	32 1/8		18 1/2	14	11	26 1/8
7446 G	34	39 1/2	16 3/4	11 7/8	14 1/8	8 5/8	35 5/8		20 1/2	15 1/2	12	30 1/8
74410 G	34	39 1/2	16 3/4	11 7/8	14 1/8	8 5/8	37 1/8		20 1/2	15 1/2	12	30 1/8
7700 E,S	*Same as 7400 Model Series*											

DOUBLE SERVICE OPTIONS	
NO.	DESCRIPTION
DS-1	3 FAUCETS ON REAR WITHOUT GAGES
DS-2	3 FAUCETS ON REAR WITH GAGES

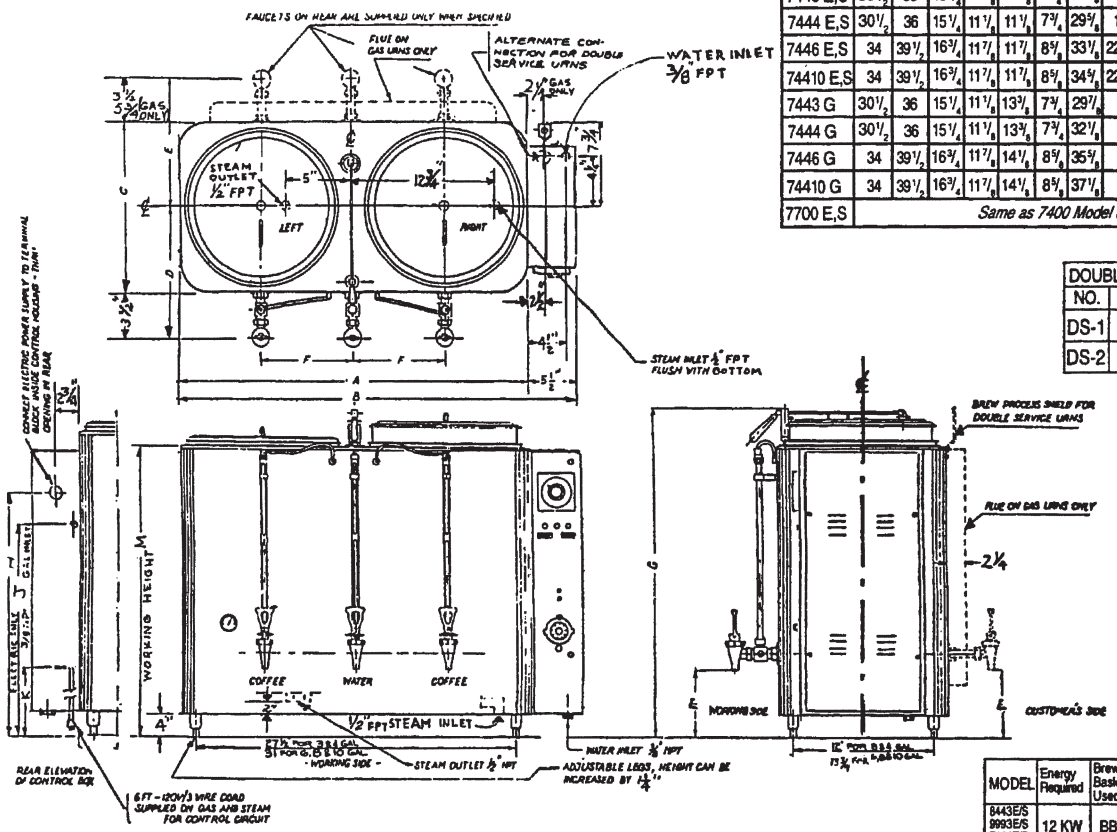

MODEL	Energy Required	Brew Basket Used	Paper Filter Size	Bag Ring Size	Liner Bag Size
8443E/S 9993E/S 7444E/S	12 KW	BB3	18 x 6	12 1/2	14 x 9
8446E/S 9996E/S	15 KW	BB6	21 x 9	14	17 x 9
84410E/S 99910E/S 74410E/S	15 KW	BB810	25 x 11	15	17 x 9
7443E/S	208V/240V 6KW/8KW	BB3	18 x 6	12 1/2	14 x 9
7446E/S	208V/240V 8.5KW/11.5KW	BB6	21 x 9	14	17 x 9
7443G	35,000 BTU/hour	BB3	18 x 6	12 1/2	14 x 9
7444G	35,000 BTU/hour	BB3	18 x 6	12 1/2	14 x 9
7446G	35,000 BTU/hour	BB6	21 x 9	14	17 x 9
74410G	35,000 BTU/hour	BB810	25 x 11	15	17 x 9

ALL HEIGHTS **INCREASED** BY OPT. 58 WHEN SPECIFIED

ELECTRIC HEAT - SPECIFY ELECTRIC SERVICE	STEAM HEAT - SPECIFY STEAM PRESSURE	GAS HEAT - SPECIFY TYPE OF GAS
120/208V-3 WIRE-SINGLE PHASE 120/208V-4 WIRE-THREE PHASE 120/240V-3 WIRE-SINGLE PHASE 240V-3 WIRE-THREE PHASE (EXTRA COST) 480V-3 WIRE-THREE PHASE (EXTRA COST)	OPERATING PRESSURE STANDARD IS 10 TO 25 PSIG. OTHER PRESSURES EXTRA COST. ALL REQUIRE 120V AC POWER FOR CONTROL CIRCUIT, 1 AMP.	NATURAL (SUPPLIED WITH REGULATOR - 3 1/2" W.C.) LP GAS (SUPPLIED WITH REGULATOR - 10" W.C.) ALL REQUIRE 120V AC POWER FOR CONTROL CIRCUIT, 1 AMP.

Drawing #A-890

Rough In Specifications for Twin 1.5 Gallon Automatic Brew Urn

Ⓐ ELECTRIC HEAT: SPECIFY ELECTRIC SERVICE

MODEL 7215E (SINGLE WALL): 4400W,120/240V,18AMP,1PH,3 WIRE OR
3300W,120/208V,16AMP,1PH,3 WIRE

MODEL 8215E (DUAL WALL): 6600W,120/240V,28AMP,1PH,3 WIRE OR
5000W,120/208V,24AMP,1PH,3 WIRE

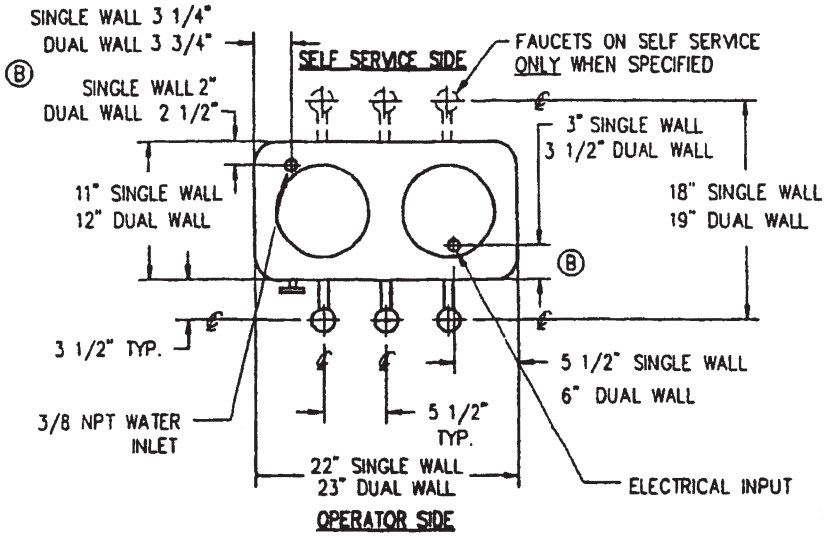

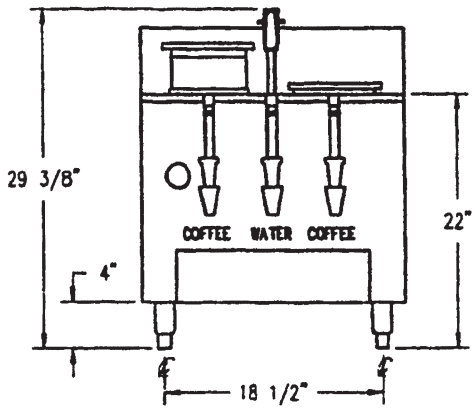

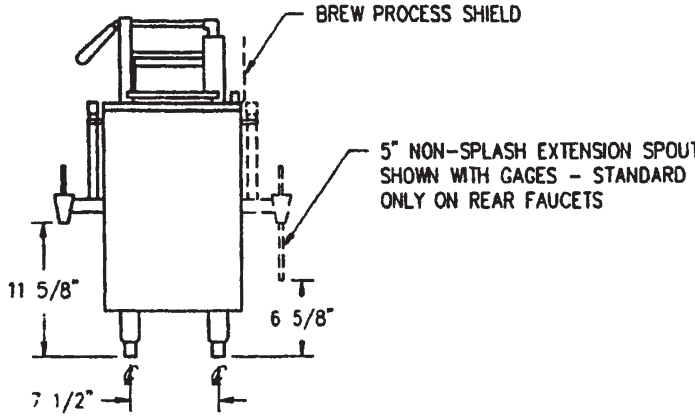

Drawing #090-749

Rough In Specifications for 8000 Single Space Saver Urn

MODEL	A	B	C	D	E	F	G	H	J	K	L	M	N	P	R	S	T
8113	19	9 1/2	16 1/4	8 1/8	5 1/2	11 5/8	23 1/4	6	8	15	12	23 1/2	29	13 1/8	5 1/2	6 1/2	8 1/2
8116	22	11	17 3/4	8 7/8	7 5/8	12 3/8	24 3/4	7 1/2	9 1/2	18	13 3/4	29 1/2	35	13 1/2	5 1/2	8	8 1/2
80110	22	11	17 3/4	8 7/8	7 5/8	12 3/8	24 3/4	7 1/2	9 1/2	18	13 3/4	31 1/2	38 1/2	13 1/2	5 1/2	8	8 1/2
9113	18	9	15 1/4	7 5/8	5 1/2	11 1/8	22 1/4	6	8	15	12	23 1/2	29	13 1/8	5	6 1/2	8 1/8
9116	21	10 1/2	16 3/4	8 3/8	7 5/8	11 7/8	23 3/4	7 1/2	9 1/2	18	13 3/4	29 1/2	35	13 1/2	5	8	8 1/2
90110	21	10 1/2	16 3/4	8 3/8	7 5/8	11 7/8	23 3/4	7 1/2	9 1/2	18	13 3/4	31 1/2	38 1/2	13 1/2	5	8	8 1/2

DOUBLE SERVICE OPTIONS	
NO.	DESCRIPTION
DS-4	2 FAUCETS ON SELF SERVICE, NO GAGES
DS-5	2 FAUCETS ON SELF SERVICE, WITH GAGES

STEAM HEAT MODEL NO. SUFFIX (S)
SPECIFY STEAM PRESSURE. STANDARD IS 10 TO 25 PSIG. OTHER PRESSURE EXTRA COST. 6'-120V/3 WIRE CORD PLUG SUPPLIED FOR CONTROLS (1 AMP).

MAXIMUM STEAM DEMAND.	8113 9113	8116, 10 9116, 10
LBS. PER. HR.	30	70

ELECTRIC HEAT MODEL NO. SUFFIX (E)	8113 9113		8106, 10 9106, 10		8106, 10 9106, 10	
SPECIFY SERVICE	KW	AMP	KW	AMP	KW	AMP
120/208V-1 PH-3 WIRE	8	38	11.5	54	15	72
120/208V-3 PH-4 WIRE	8	22	11.5	31	15	42
120/240V-1 PH-3 WIRE	10.5	44	12	50	15	63
240V-3 PH-3 WIRE	10.5	25	12	29	15	36
480V-3 PH-3 WIRE	12	14	12	14	15	18

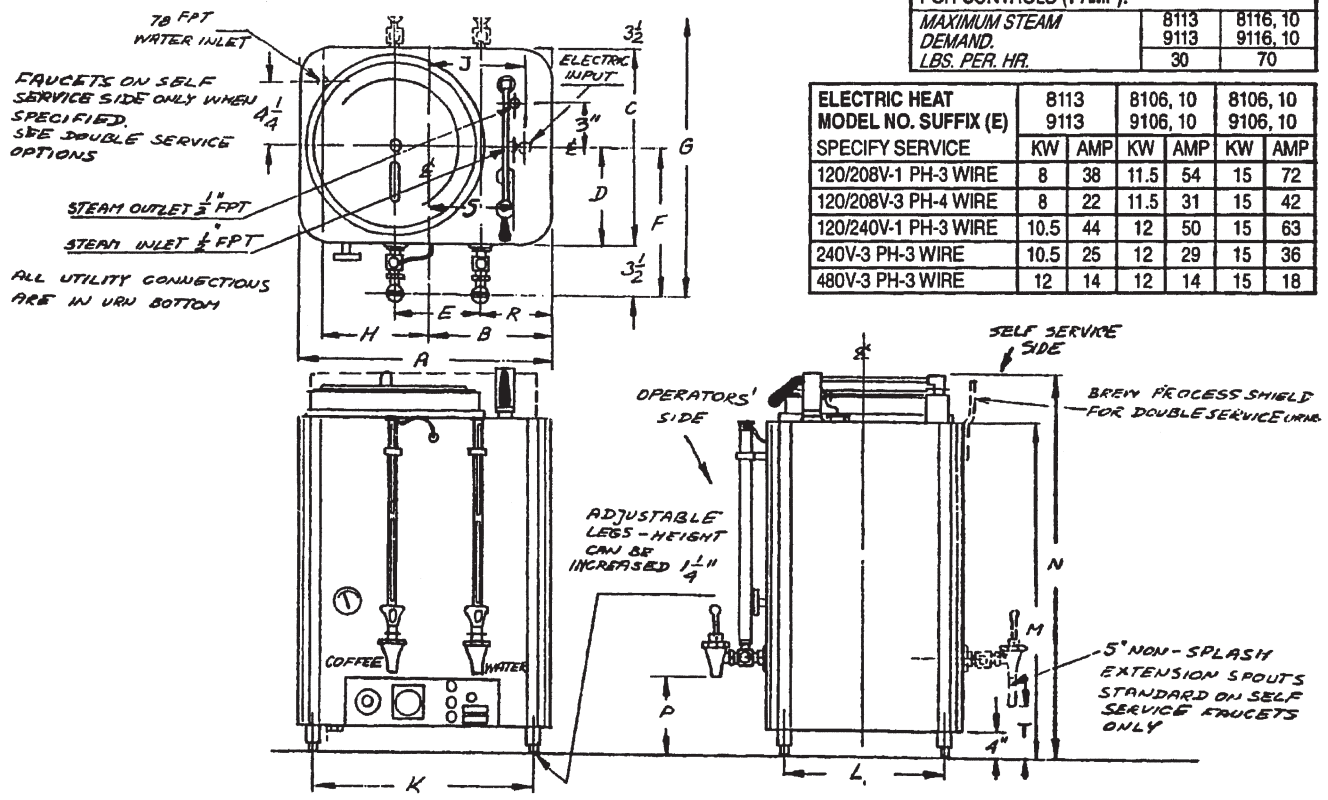

IF 120V SERVICE NOT AVAILABLE SPECIFY OPT. 22 CONTROL CIRCUIT TRANSFORMER

MODEL	BREW LINER VOL. (GAL.)	TOTAL WATER VOL. (GAL.)	BREW BASKET USED	PAPER FILTER SIZE	BAG RING SIZE	LINER BAG SIZE
8113, 9113	3	3	BB3	18 X 6	12 1/2	14 X 9
8116, 9116	6	20	BB6	21 X 9	14	17 X 9
81110, 91110	10	24	BB10	25 X 11	15	17 X 9

Drawing #090-305

Rough In Specifications for 8000 Twin Space Saver Urn

MODEL	A	B	C	D	E	F	G	K	L	N	P	R
8103	31 1/2	15 3/4	16 1/4	8 1/8	7 3/4	11 5/8	23 1/4	27 1/2	12	27 1/2	11 5/8	6 5/8
8106	35	17 1/2	17 3/4	8 7/8	8 5/8	12 3/8	24 3/4	31	13 3/4	33 1/2	12	7
81010	35	17 1/2	17 3/4	8 7/8	8 5/8	12 3/8	24 3/4	31	13 3/4	37	12	7
9103	30 1/2	15 1/4	15 1/4	7 5/8	7 3/4	11 1/8	22 1/4	27 1/2	12	27 1/2	11 5/8	6 5/8
9106	34	17	16 3/4	8 3/8	8 5/8	11 7/8	23 3/4	31	13 3/4	33 1/2	12	7
91010	34	17	16 3/4	8 3/8	8 5/8	11 7/8	23 3/4	31	13 3/4	37	12	7

DOUBLE SERVICE OPTIONS

OPT. NO.	DESCRIPTION
DS-1	3 FAUCETS REAR, NO GAUGES
DS-2	3 FAUCETS REAR WITH GAUGES

STEAM HEAT MODEL NO. SUFFIX (S)
SPECIFY STEAM PRESSURE.
STANDARD IS 10 TO 25 PSIG.
OTHER PRESSURE EXTRA COST. 6'-120V/3 WIRE CORD PLUG SUPPLIED FOR CONTROLS (1 AMP).

ELECTRIC HEAT MODEL NO. SUFFIX (E)	8103 9103		8106, 10 9106, 10	
SPECIFY SERVICE	KW	AMP	KW	AMP
120/208V-1 PH-3 WIRE	11.5	54	15	72
120/208V-3 PH-4 WIRE	11.5	31	15	42
120/240V-1 PH-3 WIRE	12	50	15	63
240V-3 PH-3 WIRE	12	29	15	36
480V-3 PH-3 WIRE	12	14	15	18

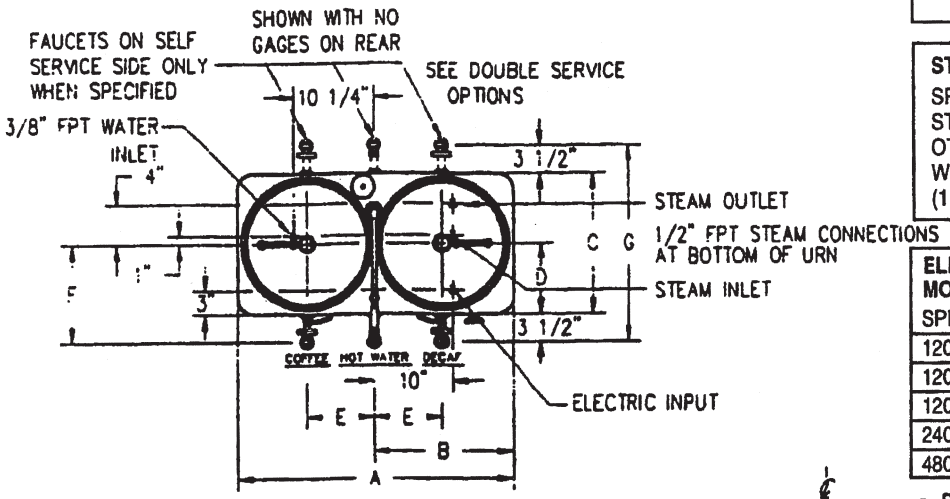

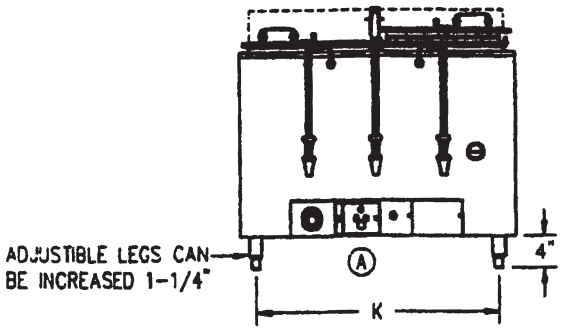

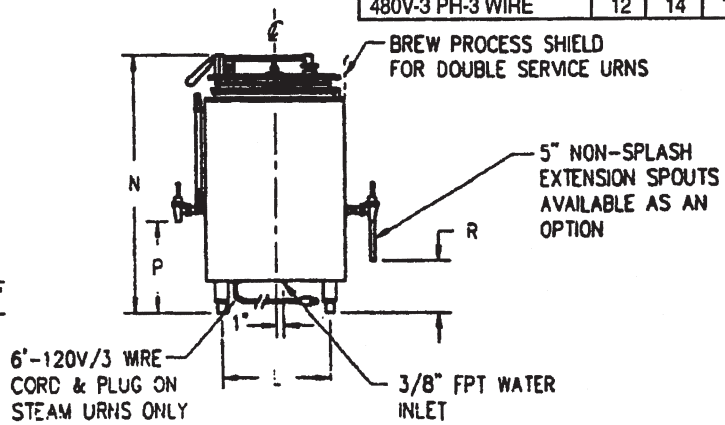

MODEL	BREW LINER VOL. (GAL.)	TOTAL WATER VOL. (GAL.)	BREW BASKET USED	PAPER FILTER SIZE	BAG RING SIZE	LINER BAG SIZE
8103, 9103	3	3	BB3	18 X 6	12 1/2	14 X 9
8106, 9106	6	20	BB6	21 X 9	14	17 X 9
81010, 91010	10	24	BB10	25 X 11	15	17 X 9

Drawing #090-779

Rough In Specifications for 8000 Triple Space Saver Urn

MODEL	A	B	C	D	E	F	G	H	I	K	L	N	P	R	S	T
7303	46	23	15 1/4	7 5/8	15 1/2	7 3/4	18 3/4	22 1/4	11 1/8	42	12	27 1/2	11 5/8	6 5/8	1	5 3/4
7306	51 1/4	25 5/8	16 3/4	8 3/8	17 1/4	8 5/8	20 1/4	23 3/4	11 7/8	47 1/4	13 3/4	33 1/2	12	7	1 7/8	6 5/8
73010	51 1/4	25 5/8	16 3/4	8 3/8	17 1/4	8 5/8	20 1/4	23 3/4	11 7/8	47 1/4	13 3/4	37	12	7	1 7/8	6 5/8
8303	47	23 1/2	16 1/4	8 1/8	15 1/2	7 3/4	19 3/4	23 1/4	11 5/8	42	12	27 1/2	11 5/8	6 5/8	1	5 3/4
8306	52 1/4	26 1/8	17 3/4	8 7/8	17 1/4	8 5/8	21 1/4	24 3/4	12 3/8	47 1/4	13 3/4	33 1/2	12	7	1 7/8	6 5/8
83010	52 1/4	26 1/8	17 3/4	8 7/8	17 1/4	8 5/8	21 1/4	24 3/4	12 3/8	47 1/4	13 3/4	37	12	7	1 7/8	6 5/8

STEAM HEAT MODEL NO. SUFFIX (S)
SPECIFY STEAM PRESSURE.
STANDARD IS 10 TO 25 PSIG.
OTHER PRESSURE EXTRA COST. 6'-120V/3 WIRE CORD PLUG SUPPLIED FOR CONTROLS (1 AMP).

NOTE:
FAUCETS ON SELF SERVICE ONLY WHEN SPECIFIED

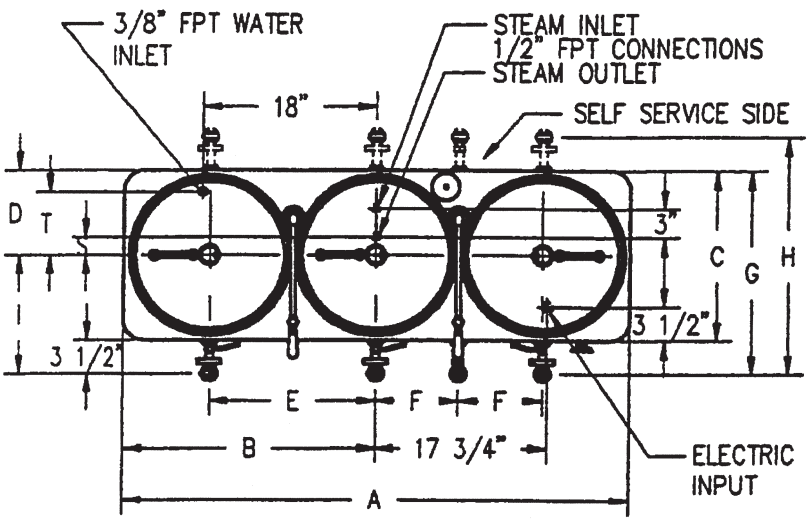

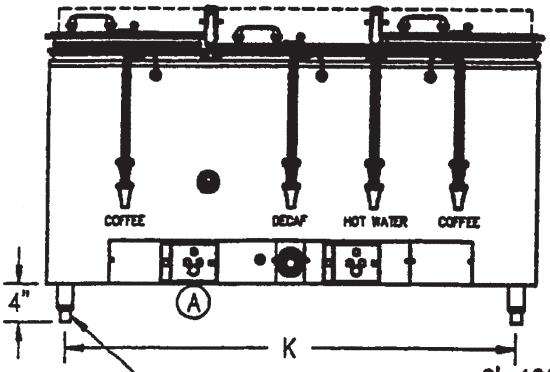

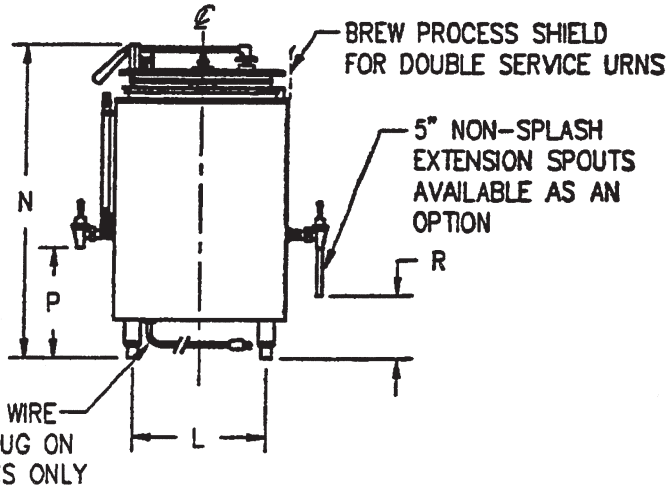

ELECTRIC HEAT MODEL NO. SUFFIX (E)	7303		7306		73010		8303		8306		83010	
SPECIFY SERVICE	KW	AMP	KW	AMP	KW	AMP	KW	AMP	KW	AMP	KW	AMP
120/208V-1 PH-3 WIRE	6	29	8.5	41	15	72	11.5	54	15	72	15	72
120/208V-3 PH-4 WIRE	8	22	11.5	31	15	42	11.5	31	15	42	15	42
120/240V-1 PH-3 WIRE	8	34	11.5	48	15	63	12	50	15	63	15	63
*240V-3 PH-3 WIRE	10.5	25	12	29	15	36	12	29	15	36	15	36
*480V-3 PH-3 WIRE	12	14	12	14	15	18	12	14	15	18	15	18

*Requires Separate 120V Supply For Controls (7 Amp)

Drawing #090-780

Wiring Diagram for all Series Urns with Air Agitation
(Does not apply to Pourover Urns)

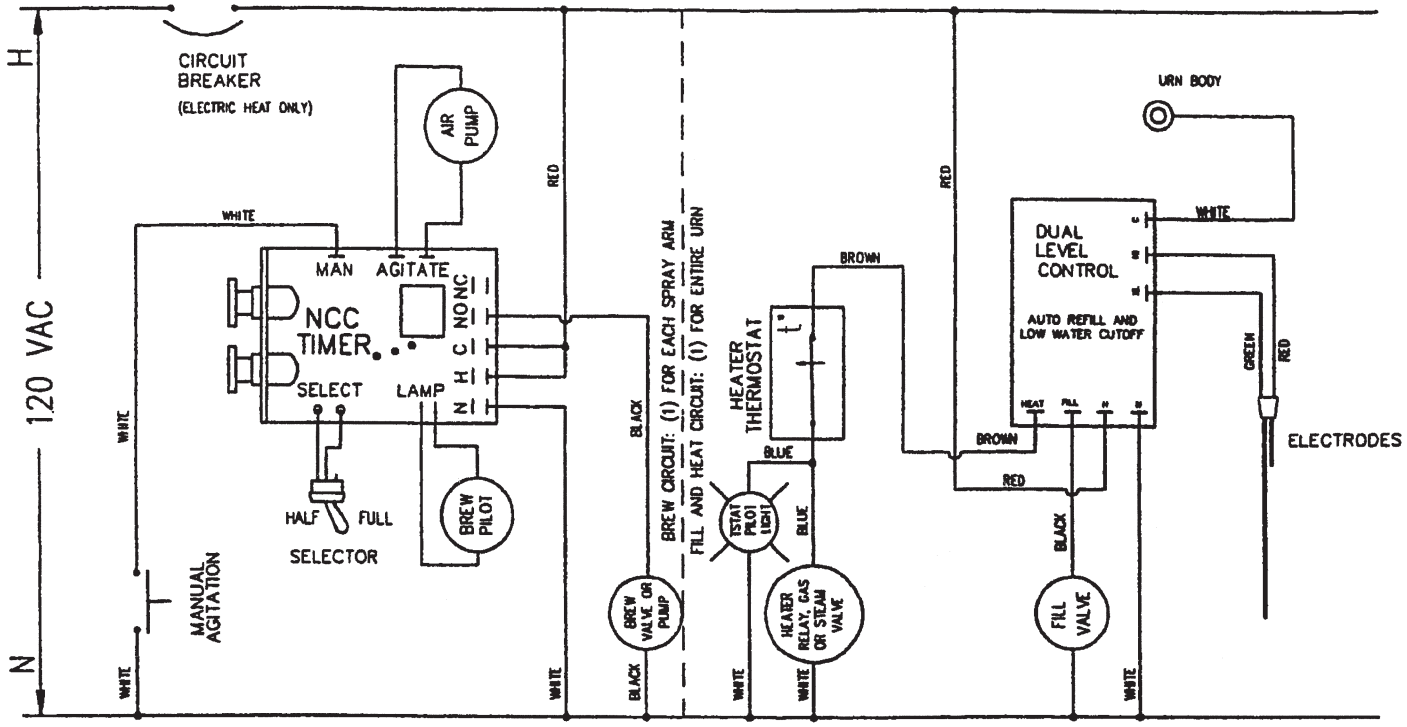

STOP

START

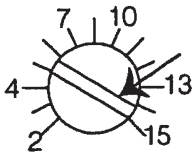

SCREWDRIVER SLOT

TIMER ADJUSTMENT UNDER SNAP PLUG ON CONTROL PANEL FACE

NOTES:
1) GAS ONLY AVAILABLE ON 7400 AND 7700 SERIES.
2) STEAM VALVE LEADS ARE BLACK OR RED.

Drawing #091-537

Wiring Diagram for all Series Urns with Low Temp No Brew
(Does not apply to Pourover Urns)

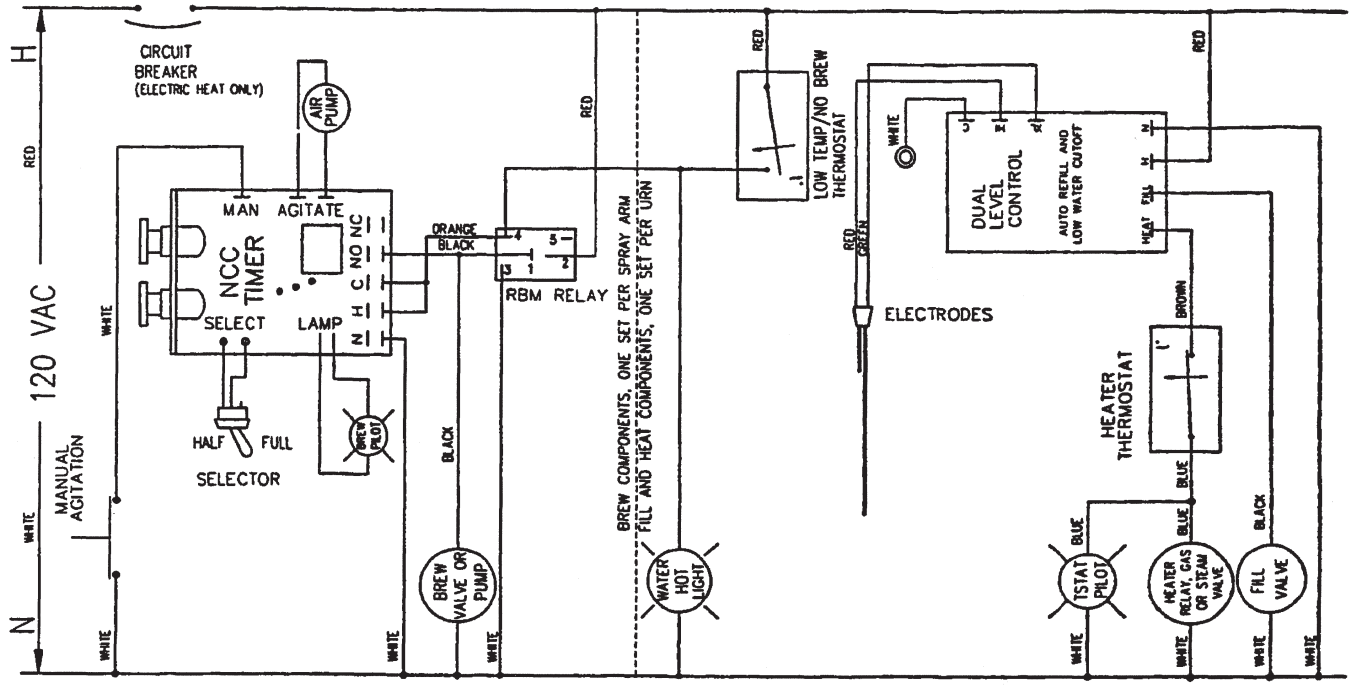

SWITCHING FROM RBM TO 2 POLE RELAY

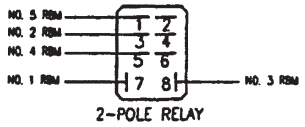

STOP

START

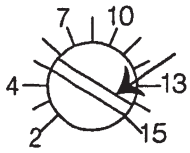

SCREWDRIVER SLOT

TIMER ADJUSTMENT UNDER SNAP PLUG ON CONTROL PANEL FACE

NOTES:
1) GAS ONLY AVAILABLE ON 7400 AND 7700 SERIES.
2) STEAM VALVE LEADS ARE BLACK OR RED.

Drawing #091-538

Wiring Diagram for all Series Urns with No Air Agitation
(Does not apply to Pourover Urns)

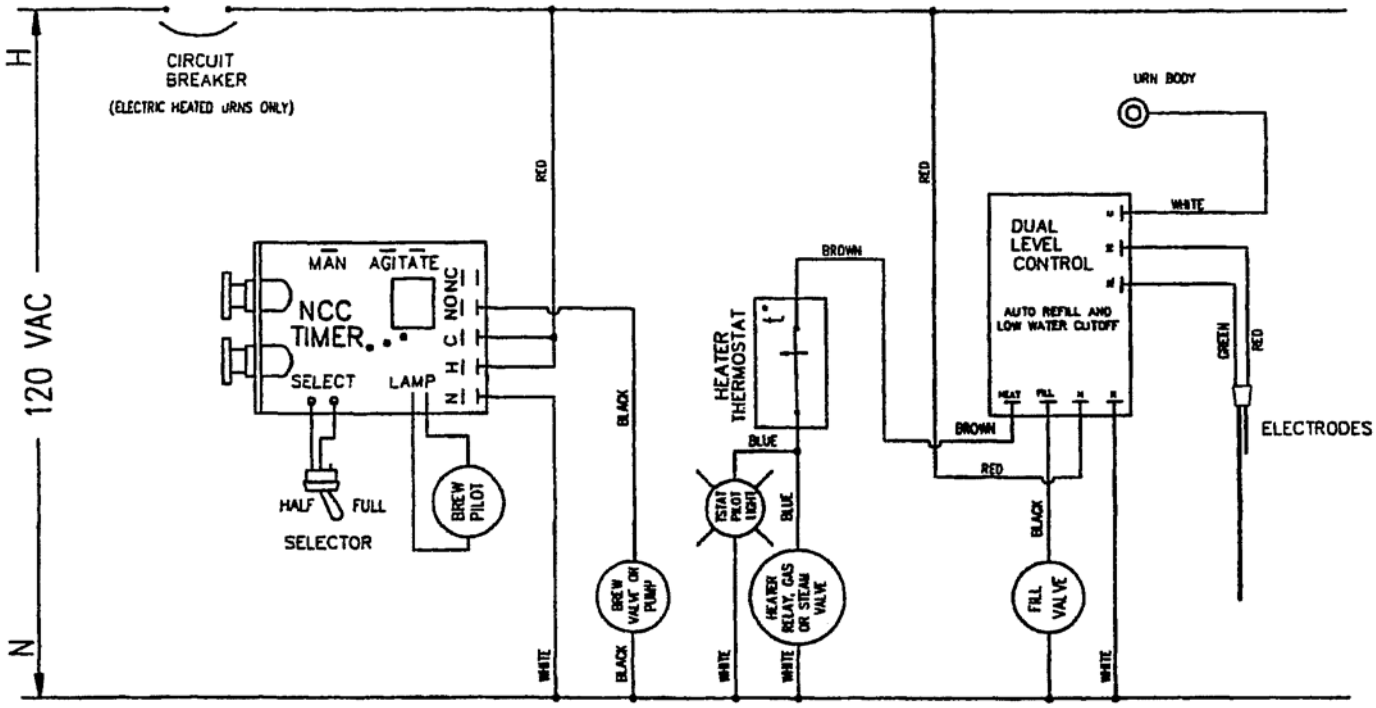

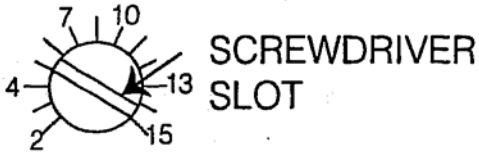

TIMER ADJUSTMENT UNDER SNAP PLUG ON CONTROL PANEL FACE

NOTES:
1) GAS ONLY AVAILABLE ON 7400 AND 7700 SERIES.
2) STEAM VALVE LEADS ARE BLACK OR RED.
3) USE THIS DIAGRAM FOR MODELS: 8215, OR CH SERIES, AND OTHER SINGLE OR TWIN URNS WITHOUT AGITATION.

Drawing #091-541

Wiring Diagram for Optional Seven Day Timer

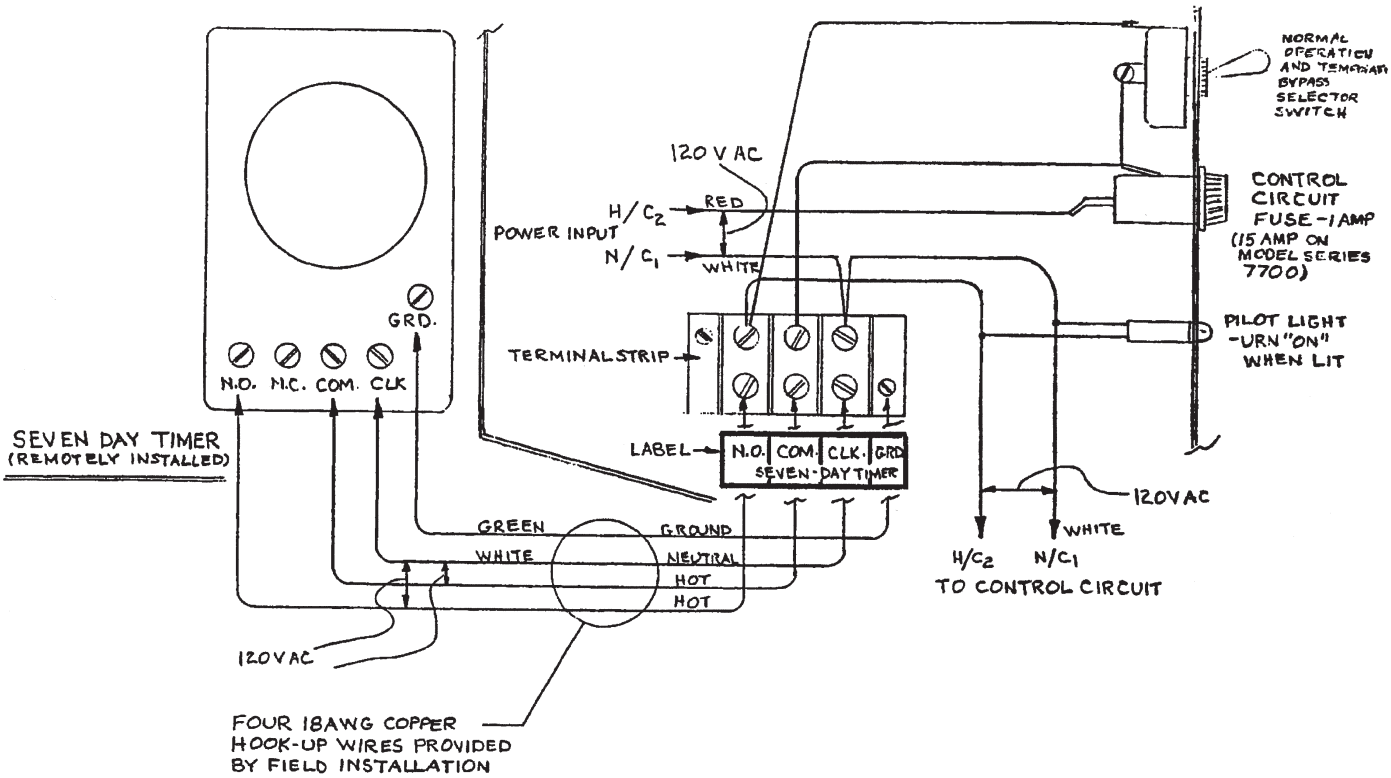

NOTE: MAY HAVE CIRCUIT BREAKER INSTEAD OF FUSE.

Drawing #A-987

Wiring Diagram for Optional High Speed Fill Jug

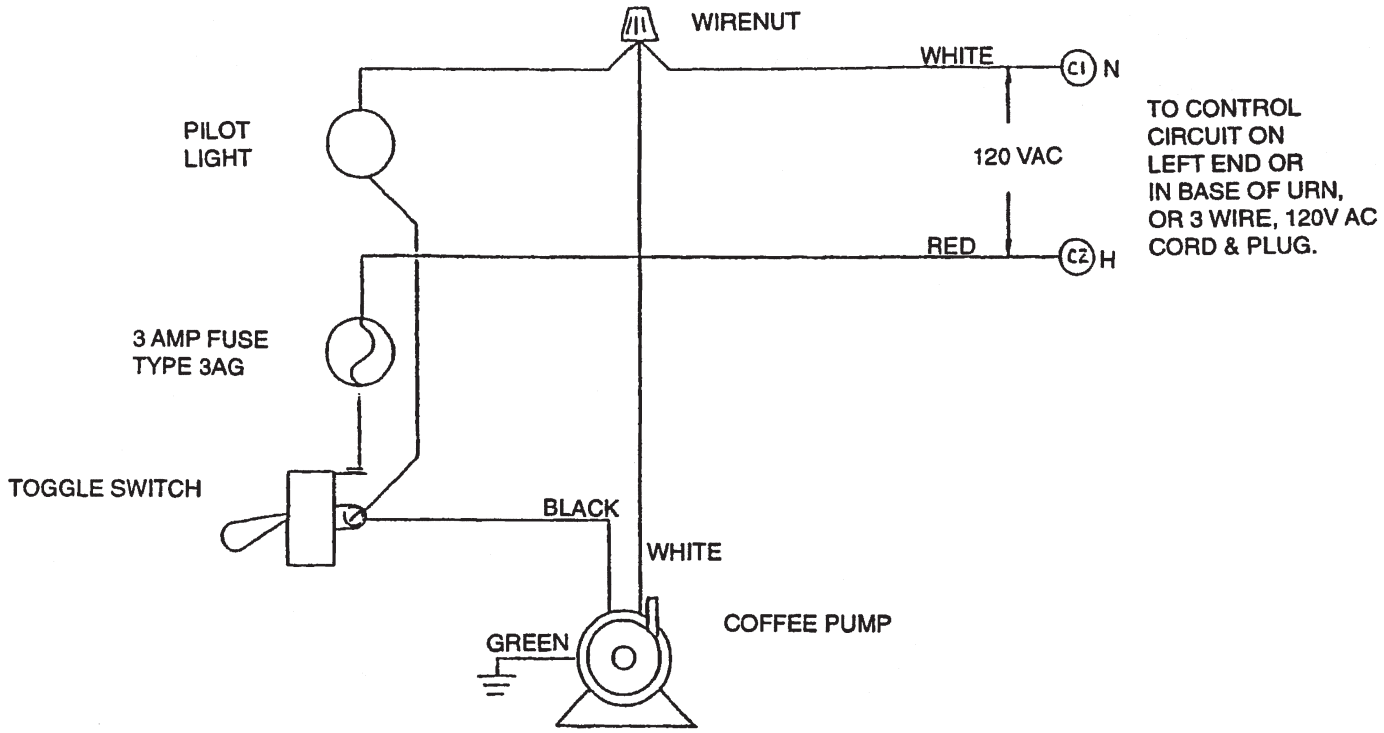

Drawing #A-1001

Wiring Diagram for 208V-240V 2 or 3 Heating Element Wiring (All Urns)

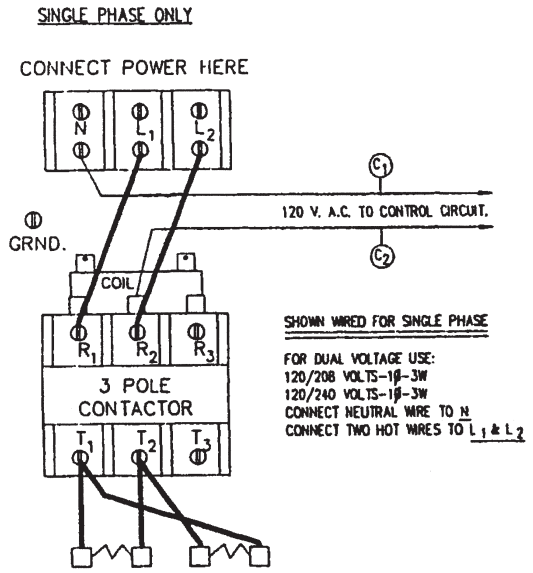

2 HEATING ELEMENTS – SINGLE PHASE ONLY
DO NOT WIRE 2 ELEMENTS 3 PHASE
NOTE: A 2 POLE CONTACTOR MAY BE USED ON MODELS HAVING A LOW WATTAGE HEATER

ELECTRIC SERVICE	STANDARD PARTS
120/208/3Ø/4 WIRE 120/208/1Ø/3 WIRE 120/240/1Ø/3 WIRE	REQUIRES CIRCUIT BREAKER FOR CONTROL CIRCUIT PROTECTION. NEUTRAL TERMINAL BLOCK PROVIDED.
208/1Ø/2 WIRE 240/1Ø/2 WIRE 240/3Ø/3 WIRE 208/3Ø/3 WIRE	NO NEUTRAL TERMINAL BLOCK SUPPLIED. NON PUMP TYPE URNS INCLUDE STEPDOWN TRANSFORMER OR SEPARATE 120V CORD FOR CONTROL CIRCUIT. PUMP TYPE AND REMOTE DISPENSING URNS HAVE SEPARATE 120V CORD FOR CONTROL CIRCUIT.

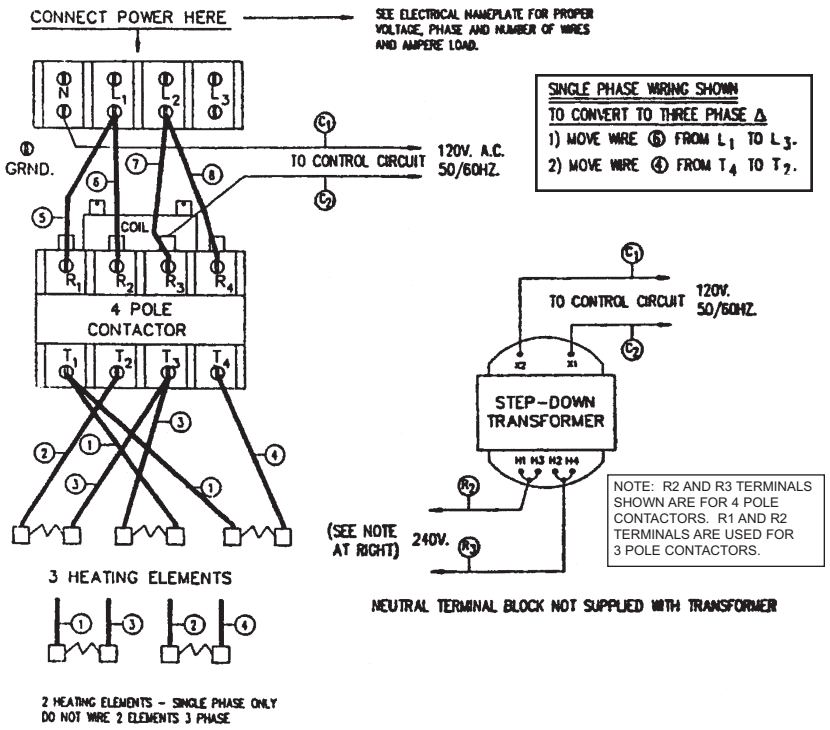

2 HEATING ELEMENTS – SINGLE PHASE ONLY
DO NOT WIRE 2 ELEMENTS 3 PHASE

Drawing #091-227

Wiring Diagram for 380V-480V 3PH, 3 Element Wiring (All Urns)

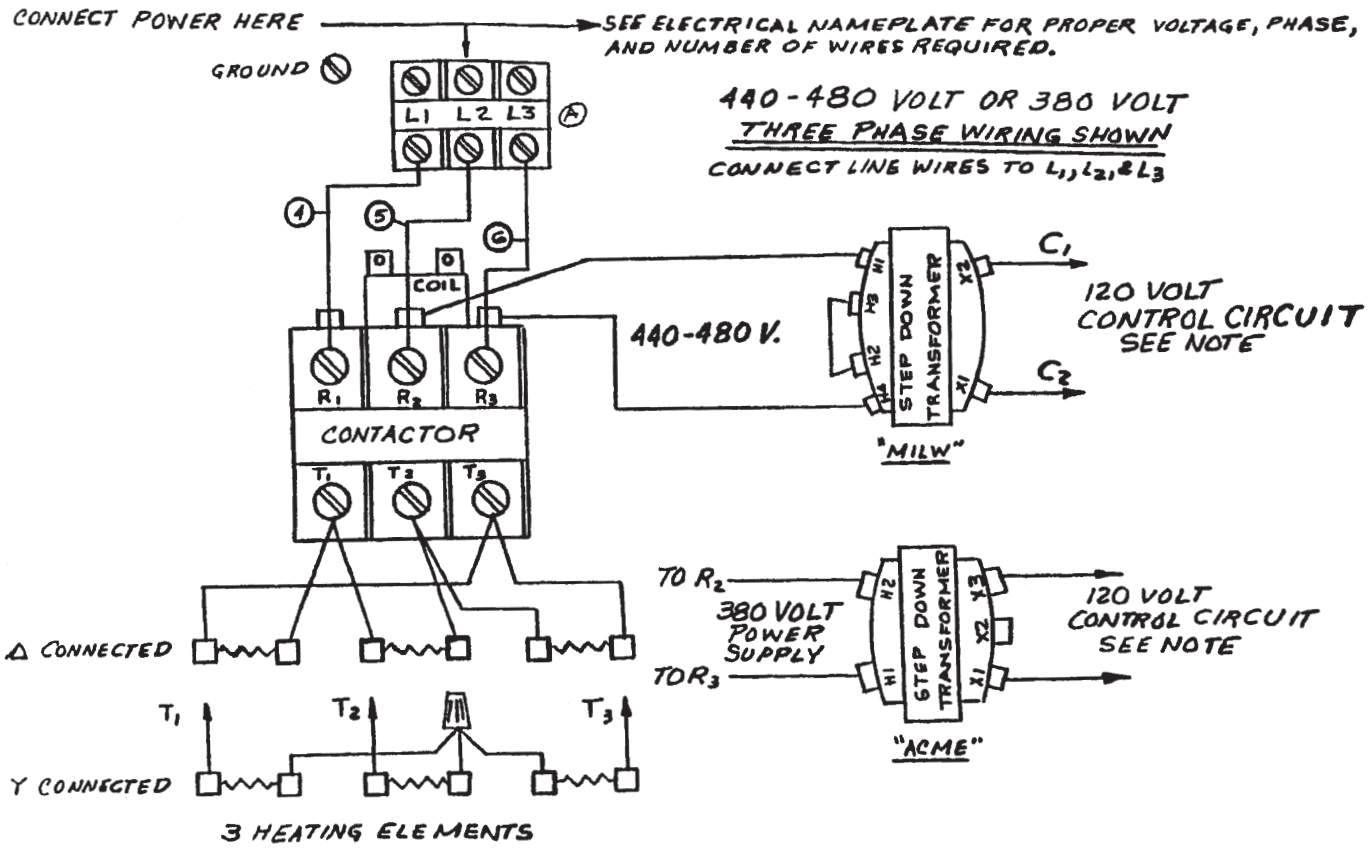

NOTE: PUMP URNS AND REMOTE DISPENSING URNS HAVE A SEPARATE CORD AND PLUG FOR CONTROL CIRCUIT.

Drawing #091-027

Wiring Diagram for 208V-240V Alternate Low Water Heater

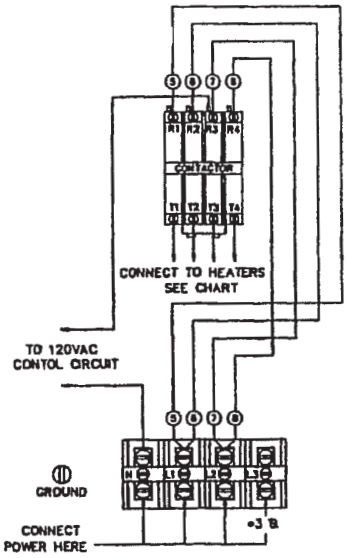

120/208V – 1 PH – 3 WIRE
120/240V – 1 PH – 3 WIRE
120/208V – 3 PH – 4 WIRE
(WITH NEUTRAL WIRE)

• FOR 3 PHASE WIRING

(B) 1. MOVE WIRE (6) FROM L1 TO L3
2. CONNECT HEATER ACCORDING TO FIG. E ON CHART
3. FIG. E FOR 3 PH ONLY

NOTE: USE WIRE NUT FOR (1) – (1) CONNECTION

(B)

T2	T3	T3	T4	T4	T4	A
T2	T3	T3	(1)	(1)	T1	B
T3	T3	T3	T1	T1	T4	C
T2	T3	T3	T1	T1	T4	D
T2	T3	T3	T1	T1	T2	E

(A)

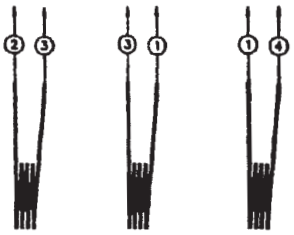

240V HEATERS

(D)

EACH HTR. SIZE	208V SERVICE A KW	A AMPS	B KW	B AMPS	C KW	C AMPS	D KW	D AMPS	E • KW	E • AMPS
3.5 KW	2.5	13	4.0	19	5.5	25	8.0	36	8.0	22
4.0 KW	3.0	14	4.5	22	6.0	29	9.0	43	9.0	25
5.0 KW	4.0	18	5.5	27	7.5	36	11.5	54	11.5	31
5.7 KW	4.5	21	6.5	31	8.5	41	13	62	13	36
6.6 KW	5.0	24	7.5	36	10.0	48	15.0	72	15.0	42

EACH HTR. SIZE	240V SERVICE A KW	A AMPS	B KW	B AMPS	C KW	C AMPS	D KW	D AMPS	E • KW	E • AMPS
3.5 KW	3.5	15	5.0	22	7.0	29	10.5	44	10.5	25
4.0 KW	4.0	17	6.0	25	8.0	33	12.0	50	12.0	29
5.0 KW	5.0	21	7.5	31	10.0	42	15.0	63	15.0	36

• 3 PH. – ONLY

WIRES (5)(6)(7)(8) ARE 8 AWG,105°C
(1)(2)(3)(4) ARE 10 AWG,105°C

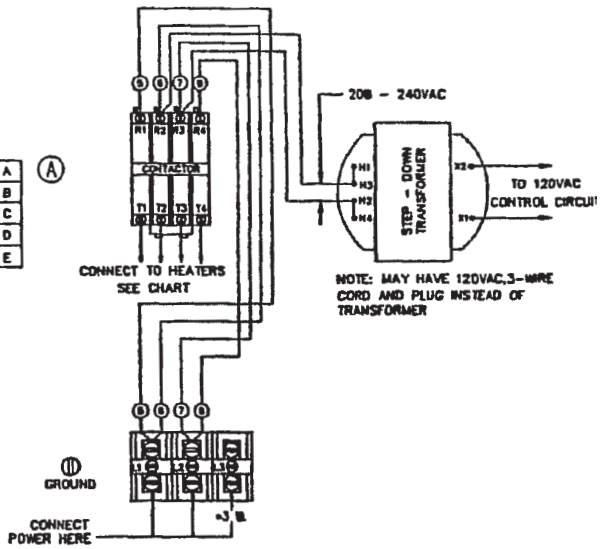

(C) 208V OR 240V – 1 PH – 2 WIRE
208V OR 240V – 3 PH – 3 WIRE

• FOR 3 PHASE WIRING

(B) 1. MOVE WIRE (6) FROM L1 TO L3
2. CONNECT HEATER ACCORDING TO FIG. E ON CHART
3. FIG. E FOR 3 PH ONLY

Drawing #091-024

Midline and Space Saver Urn Series
WARRANTY
For Models 7000, 8000, 9000, Chinese Tea Urn Series

EFFECTIVE DECEMBER 1, 1995

GENERAL WARRANTY INFORMATION

Grindmaster Corporation maintains the highest standard of quality control in the manufacturing of American Metal Ware products. We use the finest components and materials, and employ quality engineering standards and tests. All American Metal Ware brewers and dispensers, except the Space Saver Model automatic coffee urns, will be warranted for a period of one year from the date of shipment. This warranty will include parts and labor but will not cover transportation and shipping charges and will be limited to equipment sold to commercial purchasers and installed in the continental U.S.A., Hawaii, Alaska and Canada.

EXCLUSIVE

Grindmaster Corporation features a two year service warranty to include parts and labor but not transportation and shipping charges on its American Metal Ware Space Saver (800 Series Model) automatic coffee urns. The warranty is limited to equipment sold to commercial purchasers and installed in the continental U.S.A., Hawaii, Alaska and Canada.

EXCEPTIONS

Coverage is not included for labor needed or caused by:

- Adjustments of temperature or flow rates or timers. These adjustments are covered in the technical manual provided and subject to user preferences.
- This warranty does not cover maintenance consumable parts such as o-rings, seat cups, washers. These are subject to NORMAL wear of everyday usage and are a responsibility of the user.
- Accident
- Improper installation
- Neglect or abuse
- Excessive lime/mineral content of water used
- Cleaning of any category. Cleaning is a user's responsibility.
- All warranties are null and void if muriatic or any other form of hydraulic acid is used for cleaning or deliming our equipment.

NOTE: THIS WARRANTY SUPERSEDES ANY OTHER WARRANTY. ALL OTHER WARRANTIES, EXPRESSED OR IMPLIED, INCLUDING THE WARRANTIES OR MERCHANTABILITY AND FITNESS FOR A PARTICULAR PURPOSE OR USE, ARE HEREBY EXCLUDED AND DISCLAIMED.

HOW TO OBTAIN WARRANTY SERVICES

Call Grindmaster Corporation Service Department toll free at 1-800-695-4500 or +1-502-425-4776, press selection three (3) for technical services or write to : Grindmaster Corporation Factory Service Center, P.O. Box 35020, Louisville, KY 40232. In order to receive warranty service, you must provide the serial number of the machine requiring service along with a description of the problem. Service will be arranged through a factory authorization center. Transportation is the user's responsibility. Should it become necessary to transport your machine to a service center, make sure it is properly packaged to avoid in-transit damage, which is not covered by this warranty.

No field, outside or service station work is covered by this warranty without prior authorization by Grindmaster Corporation Service Dept.

GRINDMASTER™

CORPORATION

Grindmaster® Coffee Grinders and Brewers • Espressimo® Espresso Machines • Crathco® Hot Beverage Dispensers
Crathco® Cold and Frozen Beverage Dispensers • American Metal Ware® Coffee and Tea Systems
Tel (502) 425-4776 • Fax (502) 425-4664 • 1-800-695-4500
P.O. Box 35020 • Louisville, KY 40232 • USA
www.grindmaster.com • email: info@grindmaster.com